installation and servicing

imax plus

Your Ideal installation and servicing guide

See reverse for **imax plus** users guide

spares & parts online
IBASIS.co.uk©

Models F80, F120, F160 & F200, F240, F280

When replacing any part on this appliance, use only spare parts that you can be assured conform to the safety and performance specification that we require. Do not use reconditioned or copy parts that have not been clearly authorised by Ideal Boilers.

January 2004 UIN 159 660 A01

Ideal BOILERS
ENGINEERED FOR PEACE OF MIND

Table 1 Performance Data

Boiler			F80	F120	F160	F200	F240	F280
Boiler output (non-condensing) Mean 70ºC	Max	kW	77.3	116	154.6	193.2	231.8	270.5
		Btu/h	263,750	395,800	545,950	659,250	818,900	923,000
	Min	kW	11.6	11.6	11.6	11.6	11.6	11.6
		Btu/h	39,600	39,600	39,600	39,600	39,600	39,600
Boiler output (condensing) Mean 40ºC	Max	kW	83.9	125.9	167.8	209.8	251.8	293.7
		Btu/h	286,300	429,600	572,550	715,850	859,200	1,002,150
	Min	kW	13.0	13.0	13.0	13.0	13.0	13.0
		Btu/h	44,350	44,350	44,350	44,350	44,350	44,350
Boiler Input Max Rate	Nett	kW	80	120	160	200	240	280
		Btu/h	272,950	409,450	545,950	682,450	818,900	955,400
	Gross	kW	88.8	133.2	177.6	222.0	266.4	310.8
		Btu/h	303,000	454,500	606,000	757,500	909,000	1,060,500
Boiler Input Min Rate	Nett	kW	12	12	12	12	12	12
		Btu/h	40,950	40,950	40,950	40,950	40,950	40,950
	Gross	kW	13.3	13.3	13.3	13.3	13.3	13.3
		Btu/h	45,400	45,400	45,400	45,400	45,400	45,400
Maximum Gas Rate		m^3/h	8.42	12.63	16.83	21.04	25.26	29.46
		ft^3/h	297	446	594	743	892	1040
Approx. flue gas volume (@80ºC) i.e. non-condensing	@ max. rate	m^3/h	130	196	261	326	392	457
		ft^3/h	4,590	6,920	9,220	11,510	13,840	16,140
Max. Flue Resistance		Pa	100	100	100	100	100	100
Flue Gas CO_2	@ Max Rate	%	9.0 - 9.2	9.0 - 9.2	9.0 - 9.2	9.0 - 9.2	9.0 - 9.2	9.0 - 9.2
	@ Min. Rate	%	8.8 - 9.0	8.8 - 9.0	8.8 - 9.0	8.8 - 9.0	8.8 - 9.0	8.8 - 9.0
NOx with O_2 = 0%		mg/kWh	<62	<62	<62	<62	<62	<62
		ppm	<35	<35	<35	<35	<35	<35
Part load efficiency	(Gross)	%	97.7	97.7	97.7	97.7	97.7	97.7

Table 2 General Data

Boiler		F80	F120	F160	F200	F240	F280
Gas supply		2H - G20 - 20 mbar					
Gas supply connection	R (in. BSP)	1 1/2	1 1/2	1 1/2	1 1/2	1 1/2	1 1/2
Flow connection	R (in. BSP)	2	2	2	2	2	2
Return connection	R (in. BSP)	2	2	2	2	2	2
Hydraulic Resistance @ 11Cº	mbar	280	350	450	550	720	870
Hydraulic Resistance @ 20Cº	mbar	80	100	130	180	225	275
Max Press (sealed system)	bar (psi)	6 (87)	6 (87)	6 (87)	6 (87)	6 (87)	6 (87)
Maximum Static Head	m (ft)	61 (200)	61 (200)	61 (200)	61 (200)	61 (200)	61 (200)
Boiler Electricity Supply			230V - 50Hz				
Boiler Fuse Rating			External: 3A* internal: 1.6AT & 2AF				
Power Consumption (boiler only)	W	175	250	325	400	475	550
Air Inlet	mm	150	150	150	150	150	150
Flue Size dia	mm	150	150	150	200	200	200
Condensate drain	mm	40	40	40	40	40	40
Water Content	l (gal)	10.1 (2.2)	14.2 (3.1)	18.3 (4.0)	22.4 (4.9)	26.5 (5.8)	30.6 (6.7)
Boiler dry weight (unpacked)	kg (lb)	153 (337)	182 (401)	223 (492)	261 (575)	301 (664)	345 (761)

** Electricity supply and Fuse rating for pumps etc. refer to manufacturer's instructions.*

Note.

Natural gas consumption is calculated using a calorific value of 37.8MJ/m³ (1038Btu/ft³) gross or 34 MJ/m³ (910 Btu/ft³) nett at 15ºC and 1013.25 mbar.

a. *For l/s divide the gross heat input (kW) by the gross C.V. of the gas (MJ/m³)*

b. *For ft/h³ divide the gross heat input (Btu/h) by the gross C.V. of the gas (Btu/ft³).*

HEALTH & SAFETY DOCUMENT NO. 635

The electricity at work regulations, 1989. The manufacturer's notes must NOT be taken, in any way, as overriding statutory obligations.

IMPORTANT. These appliances are CE certified for safety and performance. It is, therefore, important that no external control devices, e.g. flue dampers, economisers etc., are directly connected to these appliances unless covered by these Installation and Servicing Instructions or as otherwise recommended by **Caradon Ideal Limited** in writing. If in doubt please enquire.

Any direct connection of a control device not approved by **Caradon Ideal Limited** could invalidate the certification and the normal appliance warranty. It could also infringe the Gas Safety Regulations and the above regulations.

CAUTION. To avoid the possibility of injury during the installation, servicing or cleaning of this appliance, care should be taken when handling edges of sheet steel components.

CONTENTS

Boiler Clearances. 7
Commissioning and Testing. 32
Electrical Connections. 14
Electrical Supply. 5
Fault Finding. 36
Flue System Design. 4
Gas Safety Regulations 3
Gas Supply. 5
Introduction. 3
Initial Lighting. 32
Installation. 11
Performance Data. 2
Servicing. 34
Short List of Parts. 39
Ventilation. 10
Water Circulation. 5
Water Connections. 7
Water System Requirements. 9
Water Treatment. 5
Wiring Diagrams. 17

Key to symbols

IE = Ireland, **GB** = United Kingdom (Countries of destination)

PMS = Maximum operating pressure of water.

B23 = An appliance intended to be connected to a flue which evacuates the products of combustion to the outside of the room containing the boiler. The combustion air is drawn directly from the room. The fan is up stream of the combustion chamber.

C63 = A room sealed appliance intended to be connected to a separately approved and marketed system for the supply of combustion air and discharge of combustion products. The fan is up stream of the combustion chamber.

INTRODUCTION

The **imax plus** boilers are fully automatically controlled, floor standing, fanned, super efficient, low NOx condensing appliances.

The comprehensive boiler controls built into the appliance include:

- 0-10V BMS
- Volt free alarm contacts
- Burner hours run meters
- Weather compensating heating curve using outside temperature sensor (supplied with boiler)

The boilers can draw their combustion air from the room or via ducting from the outside.

Through a sophisticated control system combined with premix burner technology and an aluminium heat exchanger, the boilers are capable of high operating efficiencies of >94% (gross) and low emissions.

These boilers are certified to meet the requirements of the EC Gas Appliance Directive, Boiler Efficiency Directive, EMC and Low Voltage Directive.

imax plus

Natural Gas only

PI No. 0049 BM 3615

Destination Countries: GB, IE

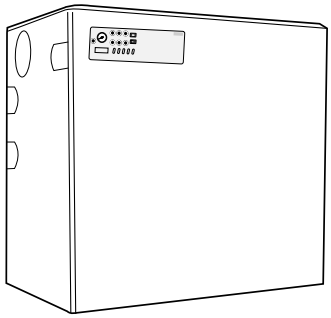

DUTY

The range of boilers is suitable for: combined indirect pumped domestic hot water and central heating systems; independent indirect pumped domestic hot water or central heating systems. Fully pumped systems may be open vented or sealed.

The range of boilers is NOT suitable for:

1. Gravity DHW systems.
2. Gravity heating systems.
3. Direct domestic hot water supply.
4. Single feed indirect cylinders.

CONSTRUCTION

The construction is of a sectional design with individual burners, fans, gas valves and ignition/supervision controls. A non-return valve ensures no reverse circulation of flue products through modules not operating. The sectional heat exchanger is of cast aluminium. A stainless steel sump collects the flue products and diverts them to the flue, whilst allowing drainage of condensate products.

LOGIC OF OPERATION

When the boiler receives a call for heat, the Modular Boiler Drive (MBD) calculates the necessary output according to the difference between the set flow temperature (or compensated flow temperature for a CH call when using an outside sensor) and the boiler modules combined flow temperature. The circulation pump is started whilst operating a DHW control valve, if required, and the first module fan is run up to starting speed. A spark is started and the gas valve opens. Ignition must occur in 5 seconds and once detected the module starts operating. Subsequently, additional modules are likely to start in the same way.

The boiler principle method of operation is to run as many modules simultaneously, at the lowest possible load, for maximum efficiency. For example:

If an **imax plus** F160 with 160kW max. input is only requested to provide 72kW.

72 ÷ 4 = 18kW per module

Therefore, the boiler operates all modules at 18kW.

If the required load is less than the min. 12kW per module, then one module after the other is automatically shutdown and the load shared by the remaining modules. The modules with the lowest number of hours run are automatically chosen to satisfy the demand.

OPTIONAL EXTRA KIT

- Tank Sensor Kit

SAFETY

Current Gas Safety (Installation and Use) Regulations or rules in force.

It is the law the that all gas appliances are installed and serviced by a CORGI registered installer, or in IE a competent person, in accordance with the regulations below. Failure to install appliances correctly could lead to prosecution. It is in your own interest, and that of safety, to ensure the law is complied with.

The installation of the boiler MUST also be in accordance with the latest I.E.E. (BS7671) Wiring Regulations, local buildings regulations, bye-laws of the local water authority, the building regulations and the Building Standards (Scotland) and any relevant requirements of the local authority.

Detailed recommendations are contained in the following codes of practice:

BS 5854	Flues and Flue Structures in Buildings.
BS.6644	Installation of gas fired hot water boilers of rated inputs between 60kW and 20MW (2nd and 3rd family gases).
BS.6880	Low temperature hot water heating systems of output greater than 45kW.
	Part 1 Fundamental and design considerations.
	Part 2 Selection of equipment.
	Part 3 Installation, commissioning and maintenance.
73/23 EEC	Low Voltage Directive (Relevant Standard is EN60335.1).
89336 EEC	Electro Magnetic Compatibility Directive.
IGE/UP/1	Soundness testing and purging of industrial and commercial gas installations.
IGE/UP/2	Gas installation pipework, boosters and compressors on industrial and commercial premises.
IGE/UP/10	Installation of gas appliances in industrial and commercial premises.

SAFE HANDLING OF SUBSTANCES

No asbestos, mercury or CFCs are included in any part of the boiler or its manufacture.

GAS SUPPLY

The local gas supplier should be consulted, at the installation planning stage, in order to establish the availability of an adequate supply of gas. An existing service pipe must NOT be used without prior consultation with the local gas supplier.

A gas meter can only be connected by the local gas supplier or by a registered CORGI engineer, or in IE a competent person.

An existing meter should be checked, preferably by the gas supplier, to ensure that the meter is adequate to deal with the rate of gas supply required. A minimum working gas pressure of 15 mbar MUST be available at the boiler inlet.

Do not use pipes of smaller size than the boiler inlet gas connection.

The completed installation MUST be tested for gas soundness and purged in accordance with the appropriate standards listed above.

Gas Boosters

A gas booster is required if the gas pressure available at the boiler is lower than that required to attain the flow rate for maximum input rating.

Location of the booster requires careful consideration but should preferably be closer to the boiler rather than the gas meter. Ventilation should also be considered to ensure ambient temperatures do not exceed designed recommendations. Further guidance is provided in IGE/UP/2 as listed above.

FLUE INSTALLATION

IMPORTANT: It is the responsibility of the installer to ensure, in practice, that products of combustion discharging from the terminal cannot re-enter the building or any other adjacent building through ventilators, windows, doors, other sources of natural air infiltration, or forced ventilation / air conditioning.

If this should occur the appliance MUST be isolated from the gas supply, labelled as 'unsafe' until corrective action can be taken.

Terminal Position

Due to the high efficiency of the boilers pluming will occur. Vertical termination is recommended and terminal positions which could cause problems should be avoided. Particular care should be taken in the case of large output boiler installations, and complying with the requirements of the Clean Air Act.

The flue must be installed in accordance with the appropriate Building Regulations and standards listed above.

FLUE SYSTEM DESIGN

Due to the high efficiency of these boilers, the flue gas temperatures are low and the buoyancy in the stack will be relatively small. The **imax plus** condensing boiler is supplied with integral fans which are fully matched to the boiler in each case to provide correct combustion air flow and overcome the flue resistance.

The power of these fans is such that there is a large reserve of pressure available to overcome a significant length of the flue without affecting the combustion performance of the boiler. The maximum pressure available at the base of the flue to overcome flue resistance is 100Pa (0.4" w.g.). This includes the resistance of any air ducts used to connect the air inlet direct to outside air. Care should be taken with tall flue systems to ensure excess buoyancy is not created. A negative pressure must not be created at the boiler flue outlet.

See table below for approximate maximum straight flue lengths. The addition of elbows and their positions in the flue will have a significant effect on the maximum flue length. Consult with your flue supplier for detailed design work.

Boiler	F80	F120	F160	F200	F240	F280
Flue Size (mm)	Ø150	Ø150	Ø150	Ø200	Ø200	Ø200
Approx. max. Straight Flue Length (m)	240	109	67	171	120	92

Material

With no requirement for buoyancy to discharge flue products and with low flue gas temperatures, single wall flues are suitable for most installations. Care should still be taken to maintain compliance with building regulations and relevant standards.

The type of flue pipe used should be 316 grade Stainless Steel or be of equivalent corrosion resistance. Advice regarding the availability of proprietary types of flue system can be obtained by contacting **Caradon Ideal Limited**. All joints or connections in the flue system must be impervious to condensate leakage. Low points in the flue system should be drained using pipe of material resistant to condensate corrosion. All drains in the flue should incorporate a water trap.

Care should also be taken in the selection of flue terminals as these tend to accentuate the formation of a plume and could freeze in cold weather conditions.

Care should be taken to ensure the specification of the chimney is suitable for the application by reference to the manufacturers literature. The Technical Support Department of **Caradon Ideal Limited**, can offer advice on the design of suitable chimney systems.

NOTE TO THE INSTALLER: LEAVE THESE INSTRUCTIONS ADJACENT TO THE BOILER.

CONDENSATE DRAIN

A condensate drain is provided on the boiler. This drain must be connected to a drainage point on site incorporating a water trap as detailed in Frame 11. All pipework and fittings in the condensate drainage system MUST be made of plastic - no other materials may be used. See Frame 11 for connection details.

IMPORTANT. Any external runs must be kept to a minimum and insulated. This is to avoid freezing in cold weather causing blocking.

FOUNDATION

The boiler must stand on a non-combustible floor (i.e. concrete or brick) which must be flat, level and of a suitable load bearing capacity to support the weight of the boiler (when filled with water) and any ancillary equipment.

Ideally the boiler should be placed on a plinth exceeding the plan area of the boiler by 75mm on each side and at least 100mm high, in order to assemble the condensate trap (refer to Frame 11). An alternative to this base would be a 100mm deep well next to the boiler (refer to Frame 6).

The boiler must not be fitted outside.

ELECTRICAL SUPPLY

WARNING This appliance must be earthed.

A 230V - 50Hz mains supply is required, fused at 3 amps.

Wiring external to the appliance MUST be in accordance with the current I.E.E. (BS7671) Wiring Regulations and any local regulations which apply.

The point of connection to the mains should be readily accessible and adjacent to the boiler.

WATER CIRCULATION SYSTEM

Due to the compact nature of the boiler, the heat stored within the castings at the point of shutdown of the burner must be dissipated into the water circuit to avoid overheating. In order to control pump operation after burner shutdown the boiler control box incorporates a 5 minute pump overrun facility. A system pump must therefore be connected to the terminals provided in the boiler. This connection must be done via a relay.

When sizing pumps, reference should be made to the appropriate graphs 1 or 2 which show the boiler resistance against flow rates to achieve the required temperature differential.

Flow rates for common systems using either 11 degC or 20 degC temperature differentials are given in the table below and highlighted on graphs 1 and 2. These figures are based on an appliance running in condensing mode. Slightly lower flow rates would be required for an appliance run in non-condensing mode.

Table 3

	11 deg C	20 deg C
imax plus F80	1.79 l/s	0.98 l/s
imax plus F120	2.68 l/s	1.47 l/s
imax plus F160	3.58 l/s	1.97 l/s
imax plus F200	4.47 l/s	2.46 l/s
imax plus F240	5.37 l/s	2.95 l/s
imax plus F280	6.26 l/s	3.44 l/s

Note.

- *With the boiler firing at maximum rate, the temperature differential should not be less than 10degC.*
  - *Higher flow rates required for lower temperature differentials could lead to erosion of the heat exchanger water ways.*
- *With the boiler operating at minimum waterflow rate, the temperature differential should not be greater than 20degC. Lower flow rates generating higher temperature differentials will lead to lockout of the boiler.*
- *The lower the return temperature to the boiler, the higher the efficiency. At return temperatures of 55ºC and below, the difference becomes more marked because the water in the flue gases starts to condense, releasing its latent heat.*

The air vent inside the boiler is not for ventilation of the whole system. An additional air vent should be fitted to the highest point of the system.

Drain taps MUST be located in accessible positions, which permit the draining of the whole system – including the boiler and hot water storage vessel. The boiler is equipped with its own drain tap, but this must not be used for draining of the whole system as this could lead to system dirt gathering in the heat exchanger, causing damage.

In installations were all radiators have been provided with a thermostatic valve (TRV), or all heating zones have individual zone isolation valves, then a bypass will be required to ensure water circulation through the boiler during pump overrun. A mixing header (see separate section) will perform this task. Alternatively this can be best achieved by means of a pressure differential valve, which is installed in a bypass between the flow and return pipes. If a bypass is used it should be fitted at least 6m from the boiler, and be capable of allowing a minimum flow rate to achieve a temperature differential of no greater than 20degC at minimum gas input.

WATER TREATMENT

The imax plus boiler has an ALUMINIUM alloy heat exchanger.

Corrosion will always occur within a heating/hot water system to a greater or lesser degree irrespective of water characteristics, unless the initial fill water from the mains is treated. For these reasons **Caradon Ideal Limited** strongly recommends that the system be thoroughly cleaned prior to the use of a stable inhibitor which does not require continual topping up to combat the effects of hardness, salts, and corrosion on the heat exchanger and its associated systems.

Therefore it is important that if water treatment is used it is suitable for the material of the heat exchanger. The ONLY water treatments approved are Fernox Copal or MB1, GE Betz Sentinel X100 or Salamander Corrosion Guard inhibitors and associated water treatments, which must be used in accordance with manufactures instructions. Current suitability should be confirmed directly with the manufacturer.

G E Betz Ltd, Sentinal Division, Foundry Lane, Widnes, Cheshire WA8 8UD, Tel: 0151 424 5351

or

Fernox Manufacturing Co. Ltd., Cookson Electronics, Forsyth Road, Sheerwater, Woking, Surrey, GU21 5RZ Tel: 01799 521133

or

Salamander Engineering Ltd., Unit 24, Reddicap Trading Estate, Sutton Coldfield, West Midlands, B75 7BU. Tel: 0121 3780952

*Artifically softened water must **NOT** be used to fill the system.*

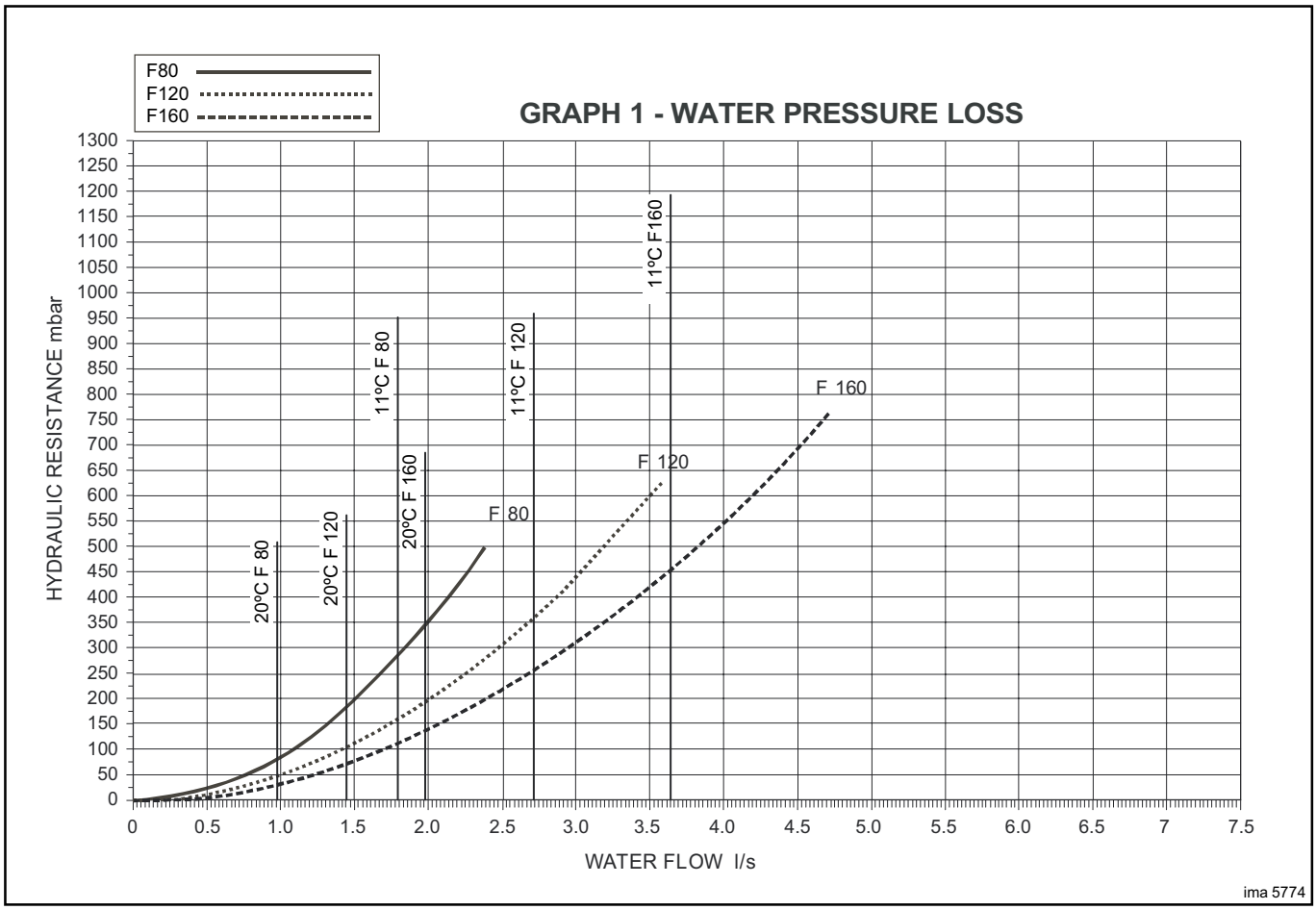
GRAPH 1 - WATER PRESSURE LOSS
F80
F120
F160
HYDRAULIC RESISTANCE mbar
WATER FLOW l/s
20ºC F 80
20ºC F 120
20ºC F 160
11ºC F 80
11ºC F 120
11ºC F160
F 80
F 120
F 160
ima 5774

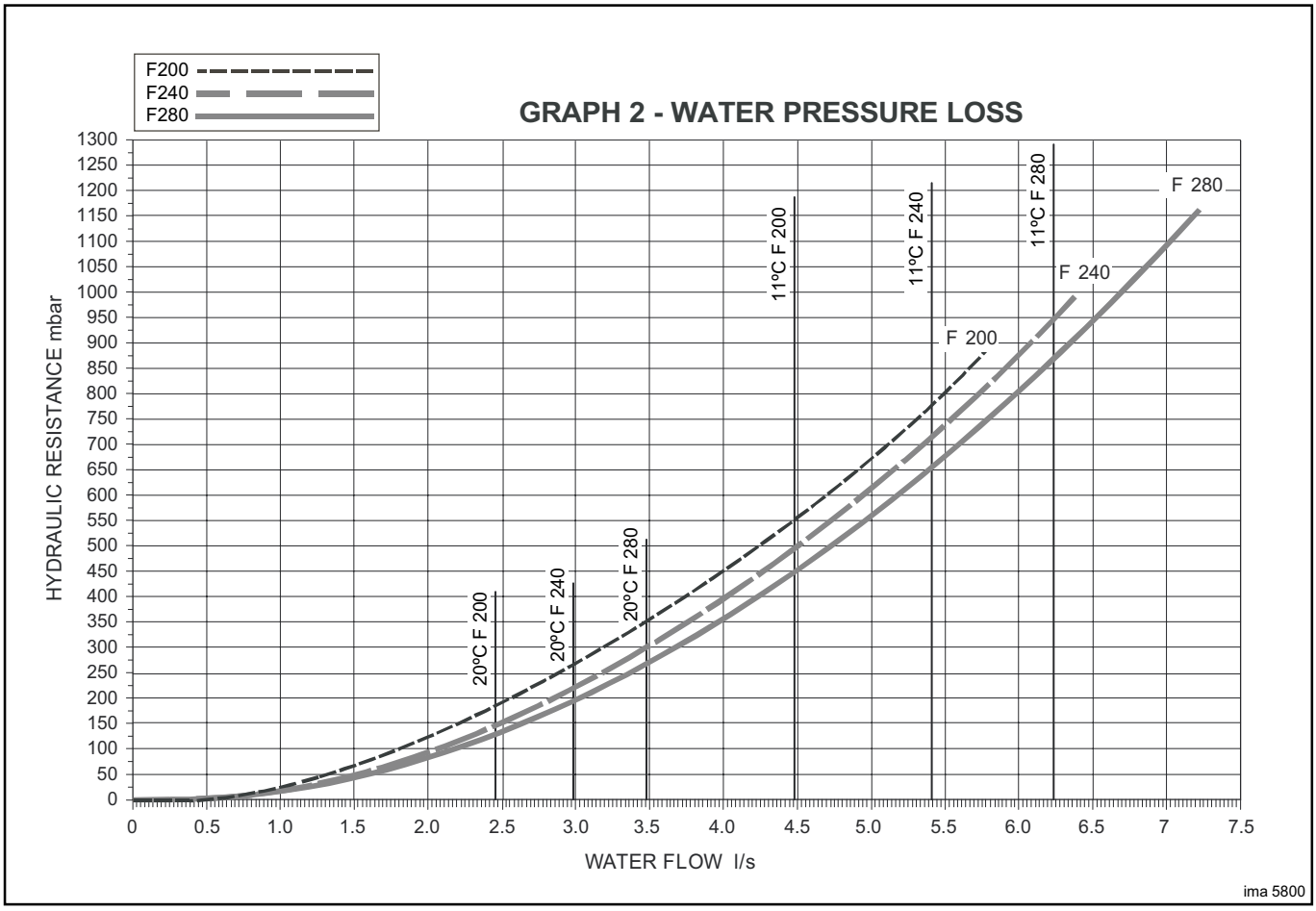
GRAPH 2 - WATER PRESSURE LOSS
F200
F240
F280
HYDRAULIC RESISTANCE mbar
WATER FLOW l/s
20ºC F 200
20ºC F 240
20ºC F 280
11ºC F 200
11ºC F 240
11ºC F 280
F 200
F 240
F 280
ima 5800

1 BOILER DIMENSIONS, CONNECTIONS AND CLEARANCES

The boiler must be positioned to ensure adequate space available for access during operation and service. It must also comply with relevant local byelaws and safety regulations. Recommended minimum clearances are as follows:

Rear - 450 mm; or 300mm for F80 and F120 with no rear flue.

Sides - Minimum clearance of 50 mm one side only, with 450 mm on opposite side for flue baffle access and pipework connections. For side flue outlet increase to 600 mm clearance. For pipework only allow 300 mm clearance.

Top - 600 mm

Front - 600 mm; except compartment access doors may be closer, but not less than 200 mm, and 600 mm must still be available for service across the full width of the boiler.

RIGHT HAND SIDE VIEW
(Delivery condition for
R.H. side connections)

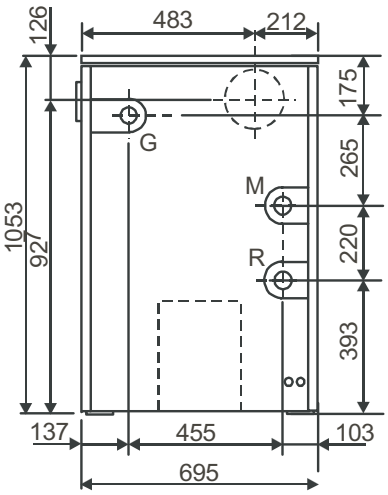

FRONT VIEW

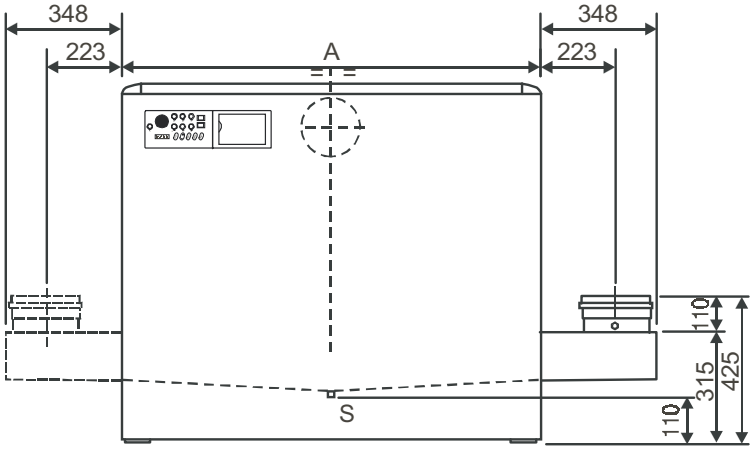

Warning:
Flow/Return connections change their position whether they are on the R.H. or on the L.H. side of the boiler (see views on the left).

Flue connection shown on RH side, options shown dotted at rear or left.

LEFT HAND SIDE VIEW
(Prenotches for left
side connections)

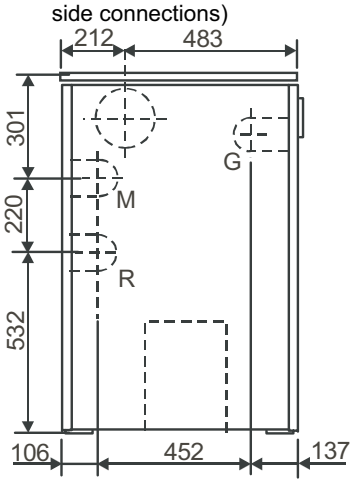

UPPER VIEW

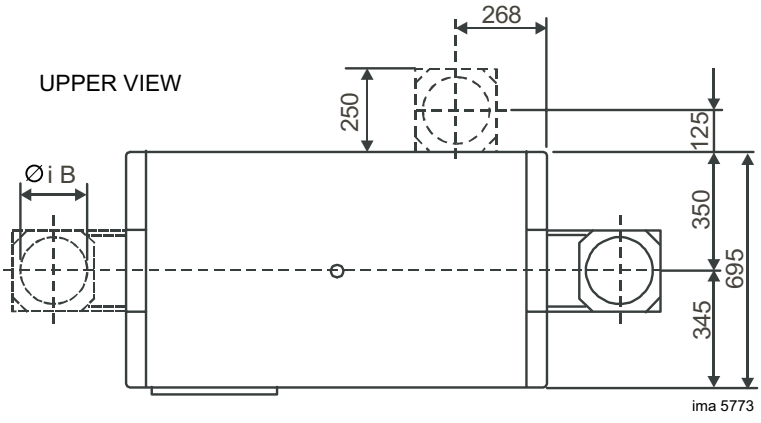

Model	Modules No. off	A	B	Weight
80	2	695	150	153 kg
120	3	695	150	182 kg
160	4	832	150	223 kg
200	5	968	200	261 kg
240	6	1102	200	301 kg
280	7	1236	200	345 kg

Connections		
Gas	G :	1½"
Flow	M :	2"
Return	R :	2"
Condensate drain	S :	∅ 40

2 MIXING HEADER

For the correct operation of the boiler, the use of a mixing header is advisable because it provides:

- separation and collection of circuit dirt
- good air venting
- separation of the two hydraulic circulation circuits

The use of a mixing header means that compensating controls can be used to operate mixing valves on a variable temperature circuit, without affecting the water flow rate through the boiler.

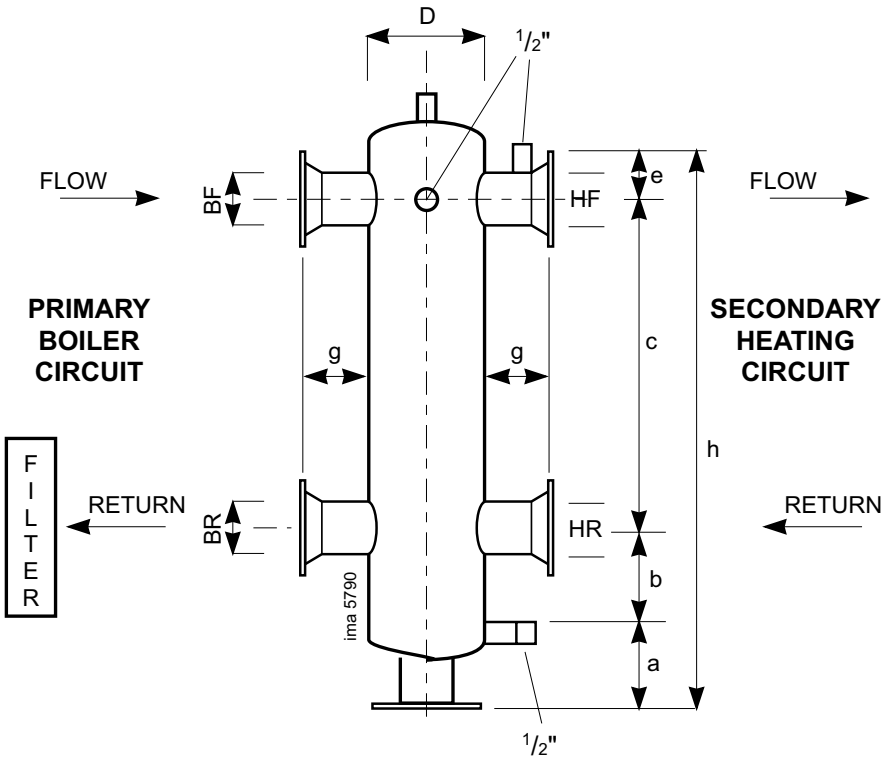

Use the Table below as a guide for sizing a suitable mixing header.

Model	D mm	BF BR DN	HF HR DN	a mm	b mm	c mm	e mm	h mm	g mm
80 kW	100	50	50	200	300	1,000	150	1,650	200
120 kW	150	65	65	200	300	1,000	150	1,650	200
160 kW	200	80	80	200	300	1,000	150	1,650	200
200-240-280 kW	200	100	100	200	300	1,000	150	1,650	200

3 OPEN VENTED SYSTEM REQUIREMENTS

Detail reference should be made to the appropriate standards listed on page 4.

The information and guidance given below is not intended to override any requirements of the above publications or the requirements of the local authority, gas or water undertakings.

The vertical distance between the pump and feed/ expansion cistern MUST comply with the pump manufacturer's minimum requirements, to avoid cavitation. Should these conditions not apply either lower the pump position or raise the cistern above the minimum requirement specified by **Caradon Ideal Limited**. The isolation valves should be fitted as close to the pump as possible.

The boiler is fitted with an automatic air vent. This air vent must never be shut off, as this could result in dry firing of the boiler and subsequent damage to the heat exchanger.

The information provided is based on the following assumptions:

1. An independent open vent/safety pipe connection is made immediately after the system flow pipe connection.
2. An independent cold feed/expansion pipe connection is made immediately after the open vent/safety pipe connection.
3. The maximum flow rate through the boiler is based on a temperature difference of 11ºC at full boiler output.
4. The boiler is at the highest point of circulation in the system. Systems designed to rise above the boiler flow tappings will automatically require a minimum static head higher than that shown.
5. The position of the open vent/safety pipe above the expansion cistern water level is given as a guide only. The final position will depend upon the particular characteristics of the system. Pumping over of water into the expansion cistern must be avoided.
6. Both open vent/safety pipe and cold feed/expansion pipes must be of adequate diameter to suit the output of the boiler. Refer to Tables 4 and 5.

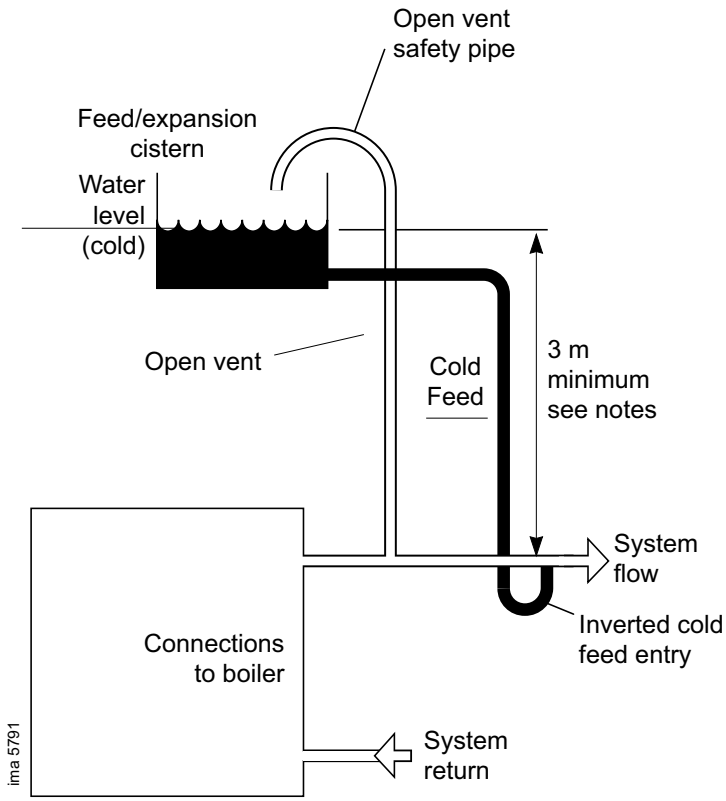

Note.

- *With a cold feed head of <8m, the pump must be fitted on the return to the boiler.*
- *This diagram does not show safety valves, water flow switches, etc. necessary for the safe operation of the system.*

Table 4 Open Vent Pipe Sizes

Rated output kW	Minimum bore mm	Nominal Size (DN)'
61 to 150	32	32
151 to 300	38	40
'Steel pipe sizes complying with medium or heavy quality or BS 1387.		

Table 5 Cold Feed Pipe Sizes

Rated output kW	Minimum bore mm	Nominal Size (DN) in'
61 to 150	25	1
151 to 300	32	1 1/4
'Steel pipe sizes complying with medium or heavy quality or BS 1387.		

Note.

Refer to Frames 23 and 24 for typical system arrangements.

4 SEALED SYSTEM REQUIREMENTS

Working pressure 6.0 bar maximum, 0.8 bar minimum.

There is no minimum water pressure switch on the boiler, with safety thermostats providing protection against dry firing. However, should a minimum water pressure switch be required in the system a ¼" connection is available on the return manifold. The electrical connections should be made in series with the minimum gas pressure switch.

Particular reference should be made to BS. 6644: Section 2; Subsection 11 and Guidance note PM5 "Automatically controlled steam and hot water boilers" published by the Health and Safety Executive.

The information and guidance given below is not intended to override any requirements of either of the above publications or the requirements of the local authority, gas or water undertakings.

In general commercial closed pressurised systems are provided with either manual or automatic water make up.

On both instances it will be necessary to fit automatic controls intended to protect the boiler, circulating system and ancillary equipment by shutting down the boiler plant if a potentially hazardous situation should arise.

Examples of such situations are low water level and operating pressure or excessive pressure within the system. Depending on circumstances, controls will need to be either manual or automatic reset. In the event of shutdown both visual and audible alarms may be necessary.

Expansion vessels used must comply with BS. 4814 and must be sized on the basis of the total system volume and initial charge pressure.

Initial minimum charge pressure should not be less than 0.8 bar (11.6 psi) and must take account of static head and specification of the pressurising equipment. The maximum water temperatures permissible at the point of minimum pressure in the system are specified in Guidance Note PM5.

When make-up water is not provided automatically it will be necessary to fit controls which shut down the plant in the event of the maximum system pressure approaching to within 0.35 bar (5 psi) of safety valve setting.

5 VENTILATION

Detail reference should be made to BS.6644:1991. The following notes are for general guidance only:

If ventilation is to be provided by means of permanent high and low vents communicating directly with outside air, then reference can be made to the sizes below. For other ventilation options refer to BS. 6644.1991.

Dust contamination in the combustion air may cause blockage of the burner slots. Unless the boiler room provides a dust free environment then direct connection of the air intake via ducting to clean outside air should be used.

Total input rating of boiler	Position of air vents	Air vent areas (air direct from outside)
Up to 2MW	HIGH LEVEL	270 cm^2 plus 2.25 cm^2 per kW in excess of 60 kW total rated input
	LOW LEVEL	540 cm^2 plus 4.5 cm^2 per kW in excess of 60 kW total rated input

The temperature within a boiler room shall not exceed 25ºC within 100mm of the floor, 32ºC at mid height and 40ºC within 100 mm of the ceiling.

6 SIDE VIEW WITH MAIN COMPONENTS

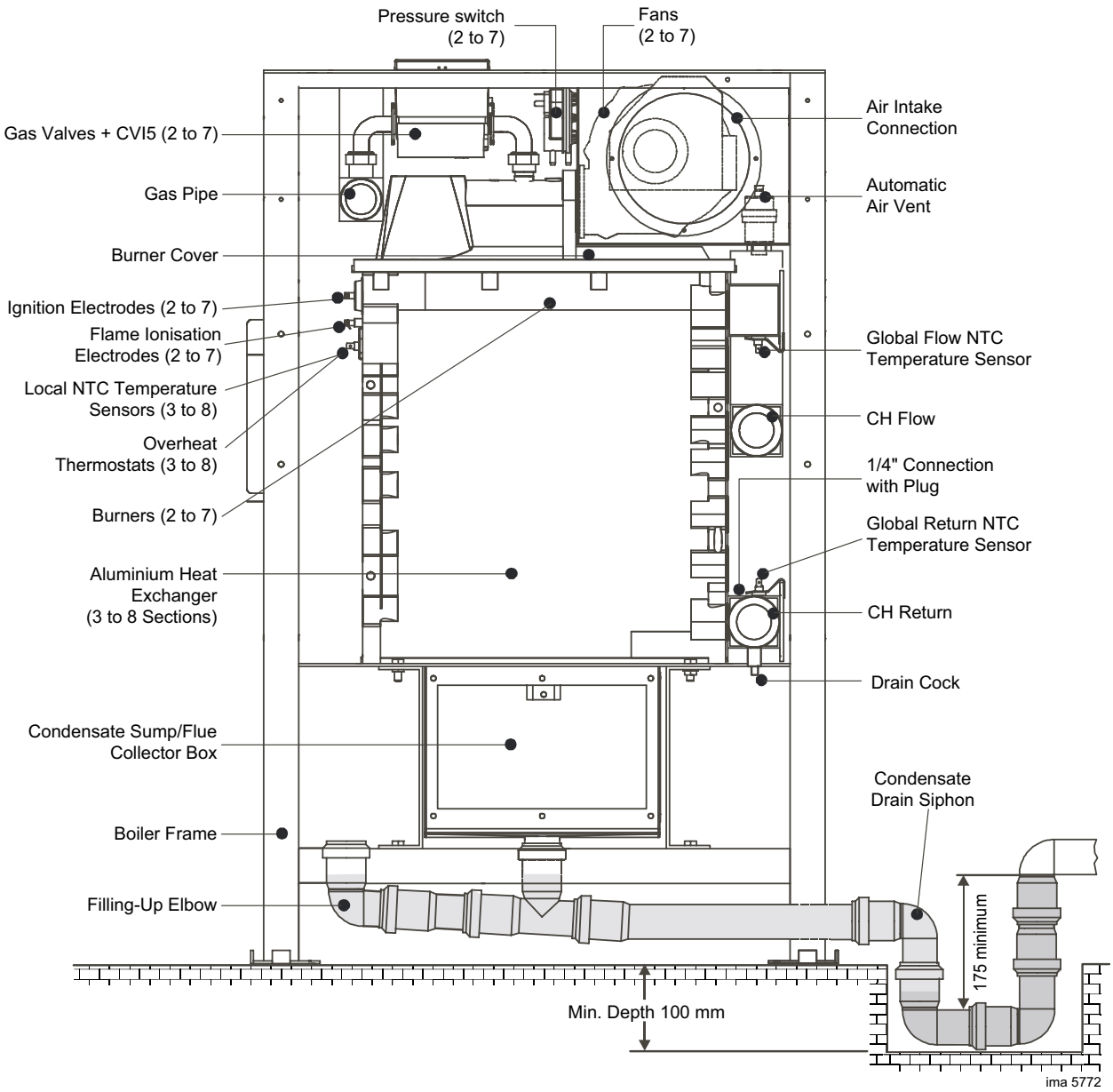

7 UNPACKING

The **imax plus** is delivered assembled and protected by a plastic bag inside a strong cardboard box and fixed on a pallet. This allows the boiler to be handled by a forklift. The boiler with the packaging can go through a door 800mm wide, whereas, without packaging, it can go through a door 700mm wide.

To unpack the boiler:

- Carefully remove the straps, then lift off the cardboard box.
- Remove the protective plastic bag.
- Safely dispose all packing materials. The plastic bag must be kept away from children.
- Remove the strap securing the front and left hand panels, and place in a safe place.
- Remove the screw securing the top panel to the back panel. Remove remaining panels and place in a safe place.
- Remove the flue manifold.
- Lift out all the loose contents as listed and leave in a safe place.
- Remove the bolts securing the boiler legs to the pallet before lifting the boiler off the pallet taking due care with respect to its weight. When lifting the boiler the weight must be supported by the boiler frame and not the sump.

CONTENTS

- Assembled boiler
- Front case attached to the back panel
- Right hand panel attached to the left hand panel
- 1m condensate pipe placed behind back panel
- Flue manifold
- Installation & Servicing / User Instructions
- Log Book
- Warranty Certificate
- Outside Sensor c/w emc filter
- Gasket & screws for flue manifold
- Screws for fixing top panel
- Condensate drain T-piece
- Condensate elbows – 2 off
- Condensate blanking plug
- Flue socket
- Flue socket gasket
- Flue socket lip seal

8 SYSTEM CONNECTIONS ORIENTATION

Note.

It may be necessary to fit the casing panels through which the service connections will pass before making these connections. However, in general it is advisable to leave the panels off as long as possible to prevent the chance of damage occurring. See Frame 12.

As delivered the boiler comes with water, gas and flue connections all on the right side. It is possible to change their orientations before fitting the boiler as follows.

Flue/Air Connections

It is possible to combine flue and air connections at any of the positions of left, right and rear. To change connections, simply remove the blanking plates from the connection required and attach the flue/air connections. Seal off the unused connections with the removed blanking plates.

Note.

To enable cleaning of the heat exchanger, access is required to lower a baffle secured to the bottom of the heat exchanger. As factory fitted, access to the securing screw is through the R/H flue manifold connection. This can be reversed to give access through the L/H flue manifold connection. See Servicing section for details.

Water Connections

To maintain hydraulic balancing it is important that if changing to left hand connections, that both are changed. The procedure is as follows:

- Remove all casing panels.
- Remove the global flow and return NTC temperature sensors from the manifolds.
- Remove the auto air vent and pressure gauge connection from the flow manifold.
- Remove the drain tap and blanking plug from the return manifold.
- Unbolt and remove the manifolds taking care not to disturb any seals.
- Rotate the return manifold through 180º and re-attach in place of the original flow manifold. Fit the auto air vent and pressure gauge connections to it. Fit the global flow NTC temperature sensor to the top edge fixing nearest the outlet connection.
- Rotate the flow manifold through 180º and re-attach in place of original return manifold. Fit the drain tap and blanking plug to it. Fit the global return NTC temperature sensor to the top edge fixing nearest the inlet connection.
- When commissioning the appliance special care should be taken to ensure water soundness around all the connections that have been remade.

Gas Connection

The gas connection can be made on either the right or left hand. To reverse the connection use the following procedure:

- Remove the side panels.
- Disconnect all gas valve inlet elbows from the manifold, retaining the sealing washers.
- Disconnect the leads from the gas pressure switch.
- Remove the fasteners securing the gas manifold and rotate through 180º before re-securing.
- Re-connect the leads to the gas pressure switch.
- Re-connect the gas valve inlet elbows to the manifold using new sealing washers if any show signs of damage.
- Gas soundness test all the connections.

Note.

When reversing the gas manifold on the **imax plus** *80 it is necessary to move the blanking plug from the first hole to the third hole.*

9 WATER CONNECTION

The boiler flow and return pipes are terminated with 2” BSP male taper threads on either the right or left hand side of the appliance (see Frame 8 for reverse connection details). Water returning from the system should be connected to the lower pipe, with the flow water connection coming from the top pipe.

If installing the boiler onto an existing system it is strongly recommended that the system be thoroughly flushed before connecting the boiler. When connecting to a new system it is still important to flush the whole system in accordance with the relevant standards.

10 GAS CONNECTION

The boiler gas supply pipe is terminated in a 1 ½” BSP male taper connection on the right or left-hand side of the appliance (see Frame 8 for reverse connection details).

A minimum working gas pressure of 15mbar (6” w.g.) must be available at the boiler inlet. Due to the presence of a minimum gas pressure switch it is therefore important to carefully calculate the gas supply pipe size to avoid nuisance shutdown.

A suitable gas cock (not supplied) should be fitted to allow isolation of the boiler. The gas connection should be suitable for being disconnected to enable servicing (see servicing section).

11 CONDENSATE DRAIN

A condensate drain for the boiler should be assembled as shown below. This can be built using the parts provided plus other pieces not supplied. The parts provided are 40mm plastic pipe. All additional pipework and fittings in the condensate drain system must also be made of plastic. No other material may be used.

When routing the condensate drain from the boiler, care should be taken to ensure alignment with one of the knock out panels on the casing.

The routing of the drain must be made to allow a minimum fall of 30mm per m. Suitable supports should be used to maintain this.

If the boiler is not installed on a plinth then a well will be required to accommodate the condensate trap. (Refer to Frame 6).

The condensate system from the boiler must be connected to a drainage point, preferably within the building. Any external runs must be kept to a minimum and insulated. This is to avoid freezing in cold weather causing blocking.

Once connected the condensate trap should be filled initially through the elbow provided, before fitting of the condensate blanking plug.

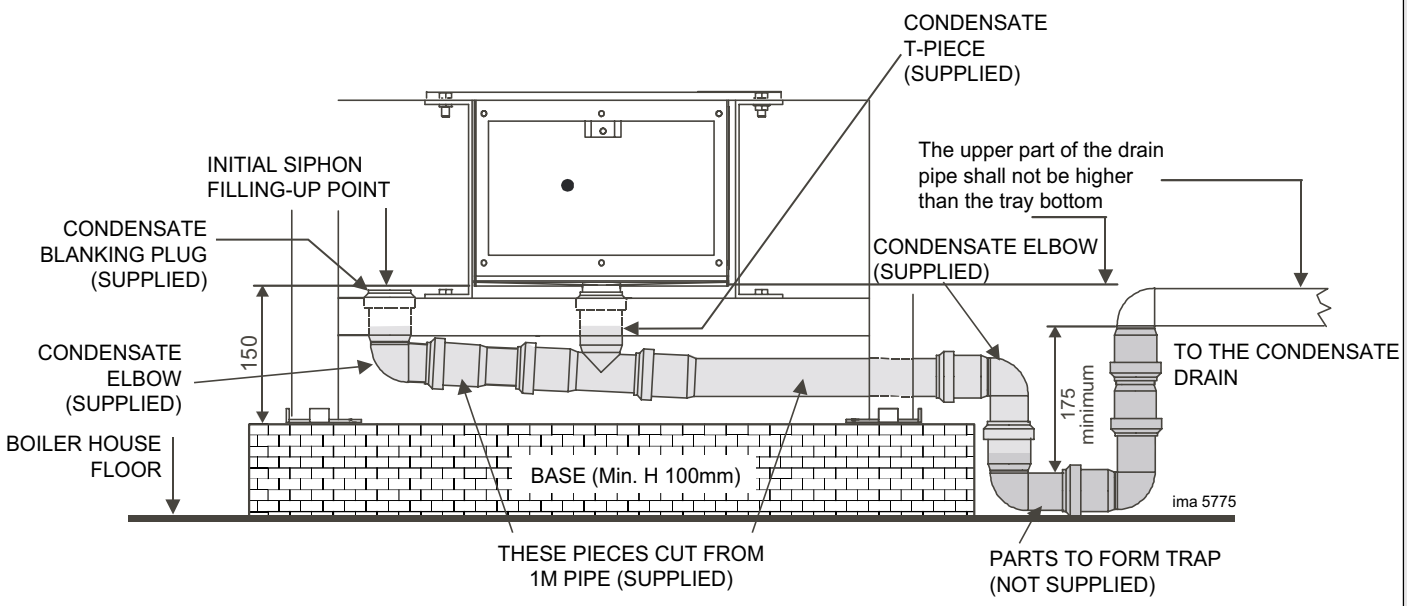

12 CASING PANEL FIXING

The panels should be fitted before firing the boiler. The method of assembling the panels is as follows:

1. Remove any knockouts from the panels required for service connections.
2. Fit the side panels by pressing them on to the latch studs.
3. Fit the front and back panels by engaging the bottom edges over the tabs on the frame feet and then pressing the panels against the latch studs.
4. Place the top panel in place and press down to engage the latch studs. Then secure the top panel to the top edges of the front and back panels using the 2 screws provided in the hardware pack. These screws must be fitted to ensure and comply with electrical safety requirements.

Note.

Connect the earth leads provided to the earth points on the panels as they are fitted to the boiler.

13 FLUE CONNECTION

See Frame 8 for alternative connection orientation details.

To fit the flue manifold, first hang the rectangular gasket over the 3 studs along the top edge of the flue outlet from the sump. Engage the flue manifold over these 3 studs and secure with the 3 nuts and 3 screws provided. Take care in aligning the gasket to ensure a good seal.

To fit the flue socket to the flue manifold, attach the adhesive backed gasket to the matching face and then secure in place with the 4 screws provided. Fit the round silicon lip seal into the recess within the flue socket outlet. When fitting the flue to the flue socket, take care not to disturb the lip seal. The flue should be supported in such a way as to not place a load on the flue manifold.

Note.

A. *As condensate will be produced under nearly all conditions, it is essential that all joints are impervious to leakage.*

B. *Air ducts may be fastened to the air inlet collar if combustion air is to be drawn direct from outside.*

C. *A max. 100Pa is available from the boiler internal fans to overcome the combined resistance of all flue and air ducts fitted to the appliance. The flue design should be such that a negative pressure is not created at the boiler flue outlet.*

14 ELECTRICAL CONNECTIONS

Warning. This appliance MUST be earthed.

A mains supply of 230V 50Hz is required. The mains supply should be fitted with a fuse rated at 3 amps.

Wiring external to the boiler MUST be in accordance with the current I.E.E. (BS. 7671) Wiring Regulations and any local regulations.

Connection should be made in a way that allows complete isolation of the electrical supply - such as a double pole switch, having a 3mm (1/8") contact separation in both poles, or a plug and unswitched socket serving only the boiler and system controls. The means of isolation must be accessible to the user after installation.

When making mains electrical connections to the boiler it is important that the wires are prepared in such a way that the earth conductor is longer than the current carrying conductors, such that if the cord anchorage should slip the current carrying conductors become taut before the earth carrying conductor.

WARNING. Sensor cables must be separated from cables in the 230V circuit. For this purpose two conduits are provided. Refer to Frame 17 for terminal strip connections.

15 MAINS ELECTRICAL CONNECTIONS

1. The appliance MUST be wired with a permanent live supply. Use the plug 'A' provided for this purpose. The mains supply must meet with the regulations in Frame 14. The boiler is phase sensitive so correct connection of the live and neutral wires is essential. The supply must not be interrupted by any system controls. Controlling the mains input in this way will prevent the pump over-run sequence and may cause damage to the heat exchanger.
2. A system pump must be connected to the boiler via a relay to ensure pump over-run. A 230V AC output is provided for this purpose on terminals 11, 12 & 13.

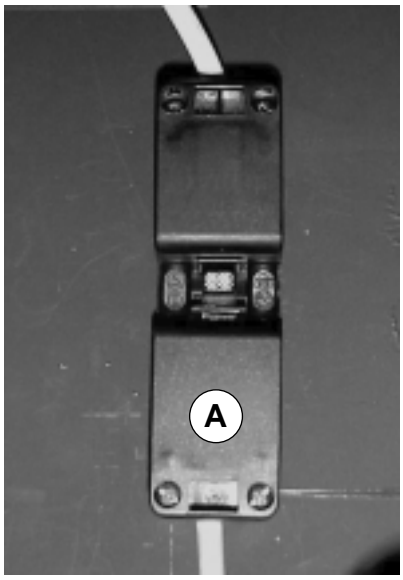

ELECTRICAL CONNECTION OF SYSTEM PUMP

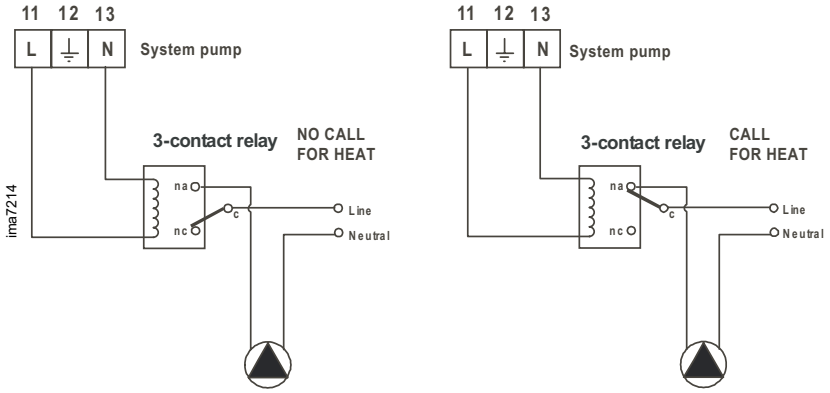

Note.

All 230V wiring and 24V wiring MUST be kept separate. For this reason separate conduits are provided for bringing wiring into the boiler.

16 CH CONTROLS CONNECTIONS

Note.

For some of the optional control methods it will be necessary to access the parameter mode. This is done by entering the Service Code described in Frame 26 and must only be performed by trained installers and Service Engineers.

1. Timer/Thermostat with Optional Weather Compensation

The boiler can be operated with a timer and/or room thermostat. Terminals (5 & 6) with a 24V supply and return are available to be switched, open/closed circuit, by a timer and/or room thermostat. The boiler senses open circuit as no call for heat and closed circuit as call for heat. Mains voltage MUST NOT be applied to these terminals. Optional fitting of the outside sensor (provided with the boiler) to terminals 3 & 4 is automatically detected. The flow temperature is then compensated against outside temperature in CH mode. See frame 34 for details on the specific behaviour of the boiler with this control and how to modify the heating curve.

2. Outside Sensor with Night Time Set Back

The boiler can be operated with a permanent call for heat, with the flow temperature compensated against outside temperature in CH mode. It is necessary to change parameter A 1st digit to '1x' see Frame 29. The outside sensor (provided with the boiler) should be connected to terminals 3 & 4. To control the night time setback period (period of lower room temperature) a timer should be connected across terminals 5 & 6. These terminals provide a 24V supply and return to be switched open/ closed circuit. Open circuit enables the night time set back period. If no night time set back period is required then a link wire should be placed across terminals 5 & 6. Mains voltage MUST NOT be applied to these terminals. See Frame 35 for details on the specific behaviour of the boiler with this control and how to modify the heating curve.

3. BMS Control

The boiler can be operated using a BMS control. It is necessary to change parameter A 1st digit to '2x' see Frame 29. A BMS can be used to operate the boiler using a 0-10V signal to control the set flow temperature. The positive signal from the BMS should be connected to terminal 9 and the ground signal to terminal 10. An alarm signal in the event of a lockout is available to the BMS from terminals 14 & 15. In the event of a lockout the boiler closes the circuit between these terminals. A link wire should be connected between terminals 5 & 6. Open circuit would enable the parallel shift controlled by parameter 7. See Frame 35 for details on the specific behaviour of the boiler with this control, and how to modify the relationship between signal voltage and set flow temperature.

Note.

Fitting the Outside Sensor

A. *The sensor should be located on an external wall of the building to be heated. Fix the sensor to a north/north-east facing wall to avoid direct radiation from the sun. The sensor should be located to avoid any heating effect from the boiler flue.*

B. *To fix the sensor to the wall, unscrew the sensor box plastic cover and screw/plug the sensor body to the wall. Wire a twin core 0.5mm^2 cable to the sensor via cable gland provided. Avoid running this cable alongside mains voltage cables.*

C. *Connect the emc filter provided with the sensor to terminals 3 and 4 in the boiler. Connect the cable from the sensor to the emc filter. The connections can be made irrespective of polarity.*

17 DHW CONTROL CONNECTIONS

If the boiler is providing both CH and DHW and the CH circuit is to operate at a reduced (condensing) temperature, then it is necessary to differentiate between CH and DHW heat demands. The boiler will react accordingly by adjusting the flow temperature and operating pumps or valves to divert the flow.

A demand for DHW always has priority over CH. The flow temperature is controlled by PARAs 1 & B. To limit the boiler output during DHW demand to match the storage cylinder capacity. See Frame 21.

1. Tank Thermostat

DHW demand can be controlled with a timer and/or tank thermostat. Connection to terminals 7 & 8, with a 24V supply and return, are available to be switched, open/closed circuit, by a timer and/or tank thermostat. The boiler senses open circuit as no call for DHW and closed circuit as call for DHW. Mains voltage MUST NOT be applied to these terminals.

2. Tank Sensor Kit

DHW demand can be controlled using a Tank Sensor Kit available from Caradon Ideal Limited. Connection should be made to terminals 7 & 8, with the boiler automatically detecting its presence. Full installation instructions come with the kit. This sensor has the advantage of providing the boiler with the actual stored DHW temperature, allowing closer output matching and reduced cycling. Use of a tank sensor kit cannot be timer controlled.

A diverting valve or a separate pump can perform DHW supply by a storage tank connected to the boiler. The factory setting is for a pump, but this can be changed using PARA A. Connection of the pump or valve should be made via a relay to terminals 16, 17 & 18.

ELECTRICAL CONNECTION OF A DHW PUMP

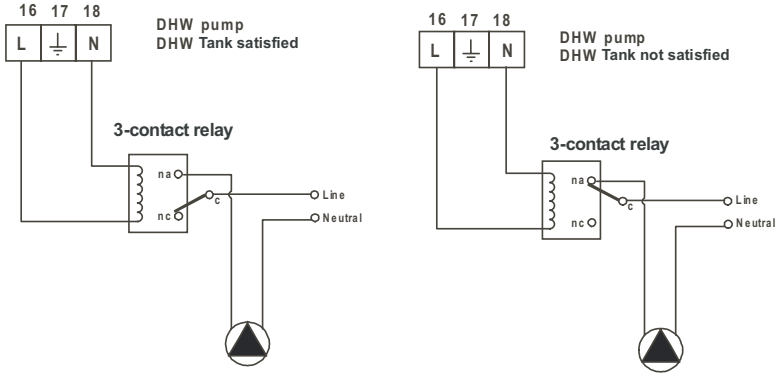

ELECTRICAL CONNECTION OF THE THREE WAY VALVE

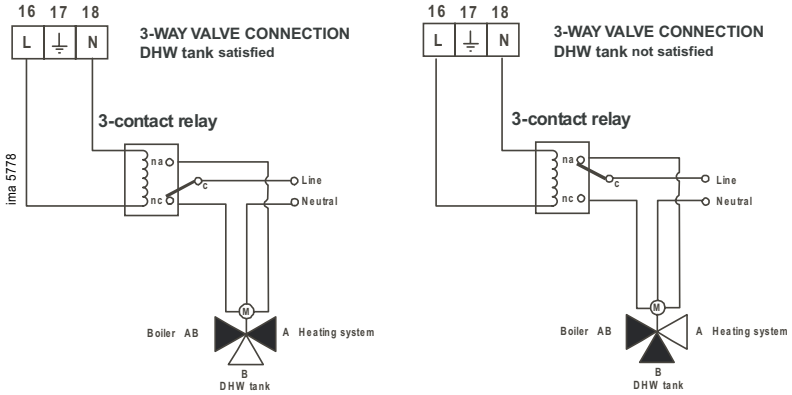

Note. The terminals 11-13 and 16-18 must be used to control a system pump and a 3-way valve or a DHW pump respectively through relays as shown above. NEVER supply power directly from these terminals.

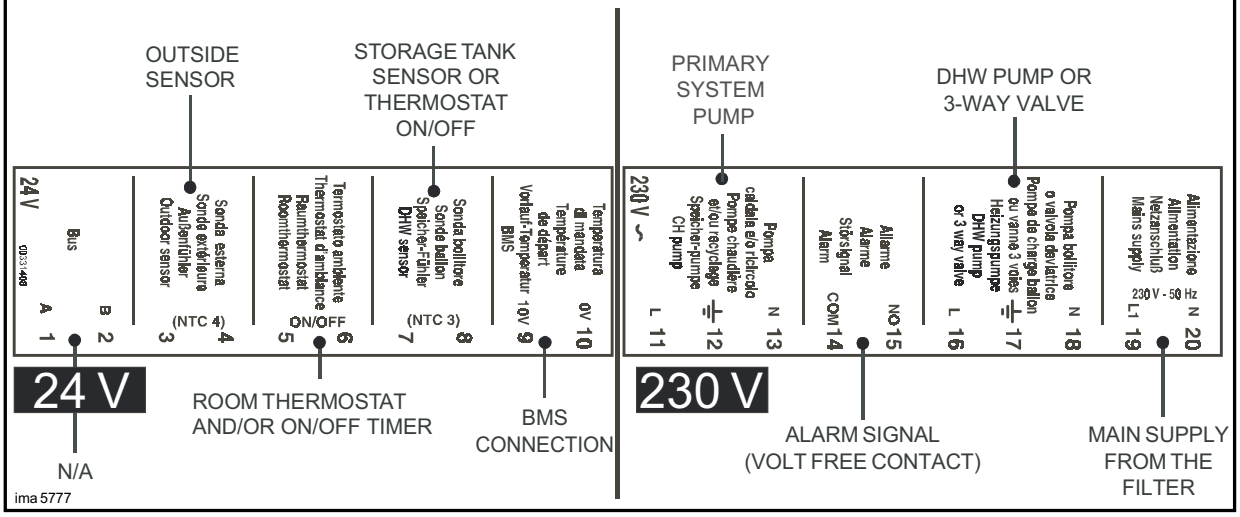

18 INTERNAL WIRING

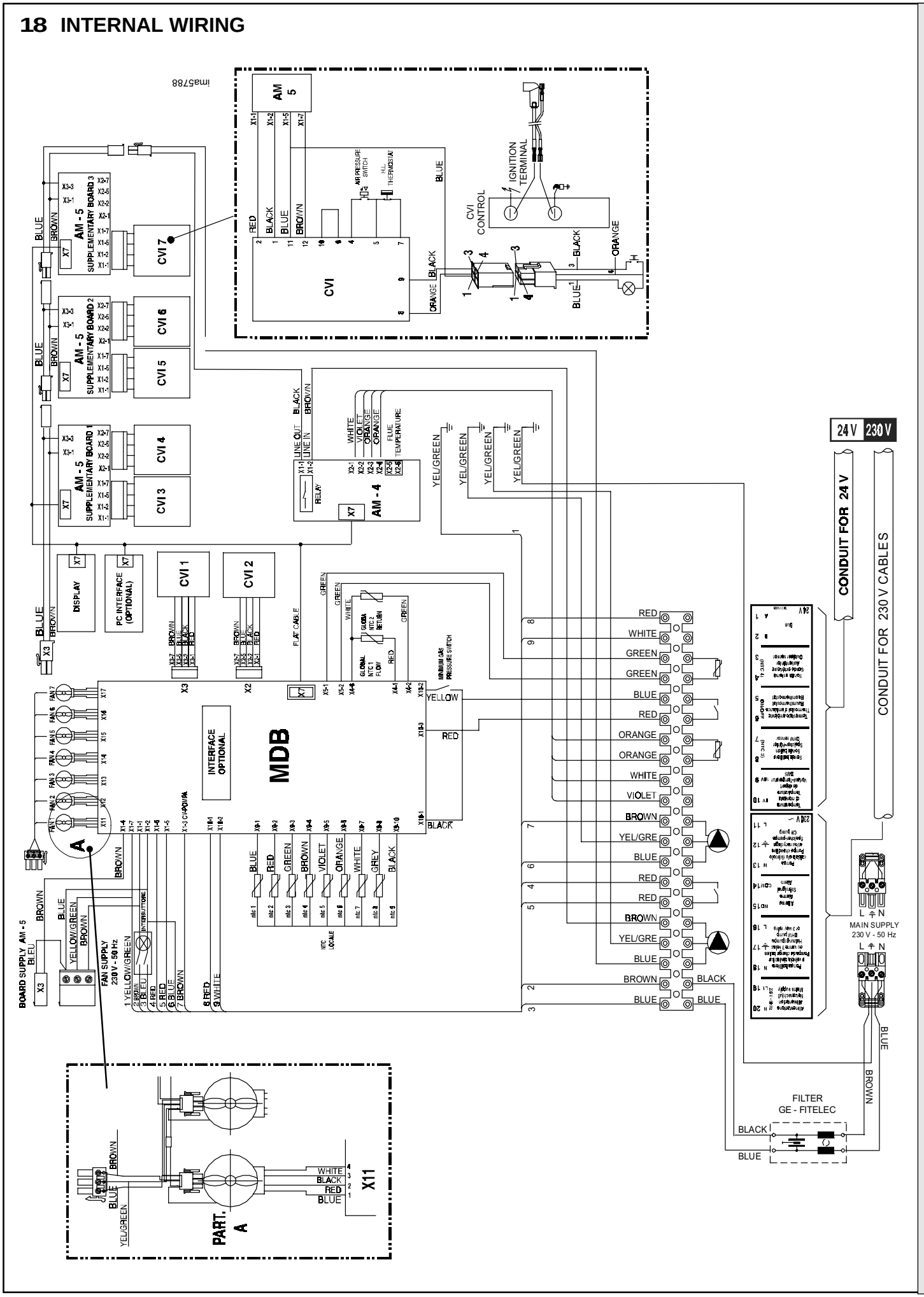

19 INTERNAL WIRING CONT'D

Detail of electrical connections on the 'CVI' control boards mounted directly onto the gas valves.

WARNING!
To disconnect the ignition lead from the CVI hold directly on the terminal (fast-on) and not on the lead.

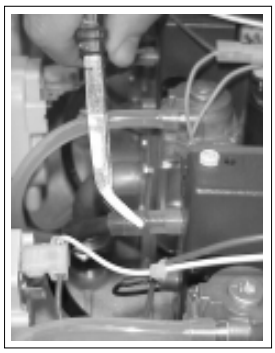

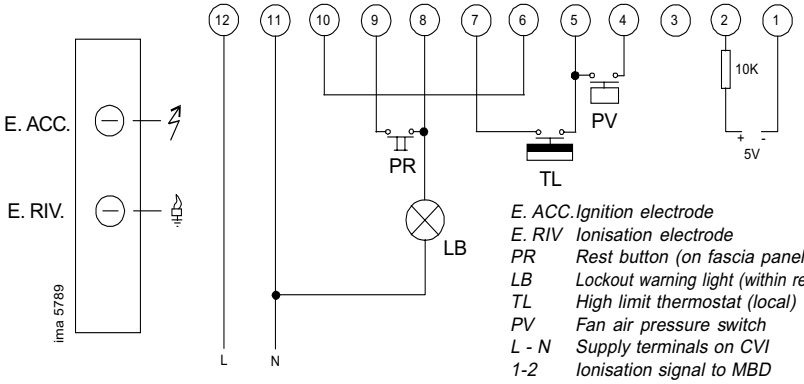

E. ACC.	*Ignition electrode*
E. RIV	*Ionisation electrode*
PR	*Rest button (on fascia panel)*
LB	*Lockout warning light (within reset button)*
TL	*High limit thermostat (local)*
PV	*Fan air pressure switch*
L - N	*Supply terminals on CVI*
1-2	*Ionisation signal to MBD*

20 CONTROL BOARD LOCATIONS

The MBD is the main control board, which determines how many modules should fire, the rate required and the flow temperature required. It can communicate directly with the CVI controls of 2 modules.

The AM-5 board is a supplementary board used with boilers containing more than 2 modules. It provides the interface between the MBD and an additional 2 modules per AM-5 board. See Frame 22 for guidance on how the AM-5 dip switches should be configured.

The AM-4 board provides several interface functions. It provides the functionality required for controlling the boiler with the BMS 0-10V system. This board controls operation of a DHW pump or valve. The output in DHW mode can also be limited by this board, see Frame 21.

The CVI boards are attached directly to the gas valves of the modules they control. When instructed by the MBD they provide the safe ignition and flame supervision of their modules.

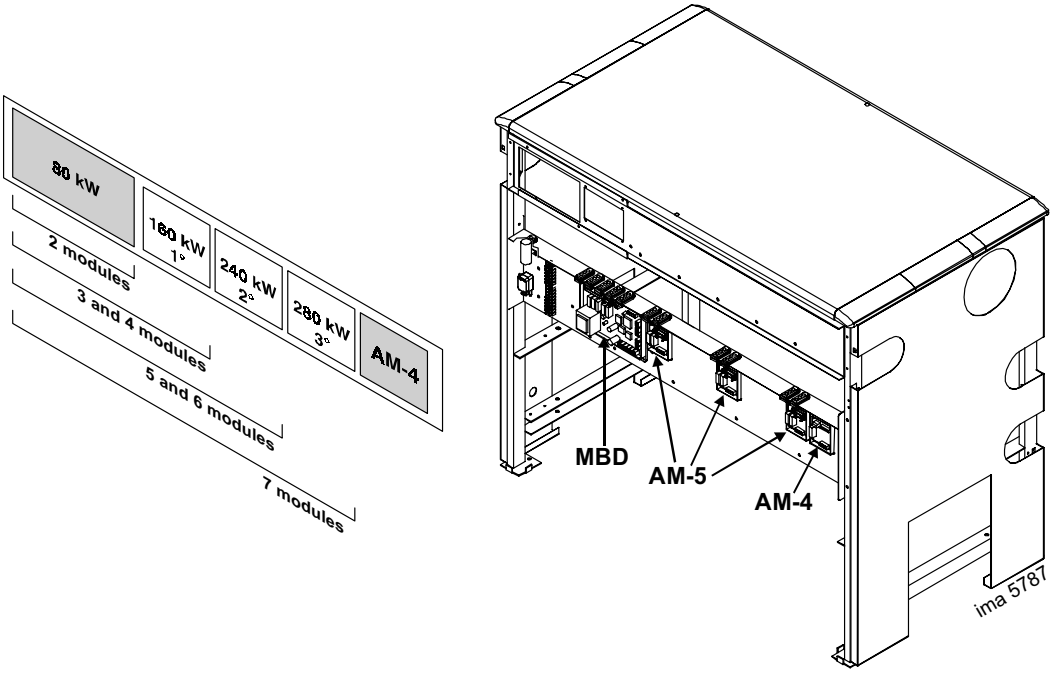

21 INTERFACE BOARD - AM4 supplementary Board

DHW Output Limiting

It is possible to limit the output of the boiler when working in DHW mode. This is in order to avoid overheating when the DHW storage tank absorbed input is less than the boiler produced output. To limit the DHW output of the boiler change the DIP switch settings on the AM-4 board (see Frame 20 for location of AM-4 board). By changing the DIP switch settings you can exclude 1, 2 or 3 modules from firing in DHW mode, see table below for settings:

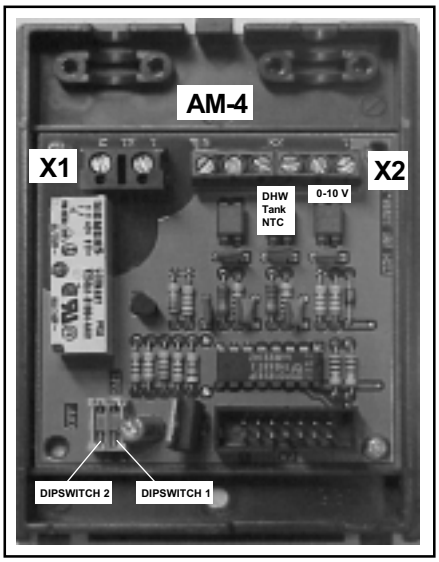

POSITION OF DIPSWITCHES

Output Reduction	-120 kW	-80 kW	-40 kW	None
Dip Switch Configuration	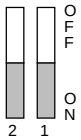	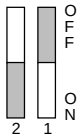	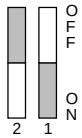	
Examples of a **ímax plus** F160	1 module available (40 kW)	2 modules available (80 kW)	3 modules available (120 kW)	All modules available (160 kW)
Examples of a **ímax plus** F280	4 modules available (160 kW)	5 modules available (200 kW)	6 modules available (240 kW)	All modules available (280 kW)

22 INTERFACE BOARD - AM5 Supplementary Board

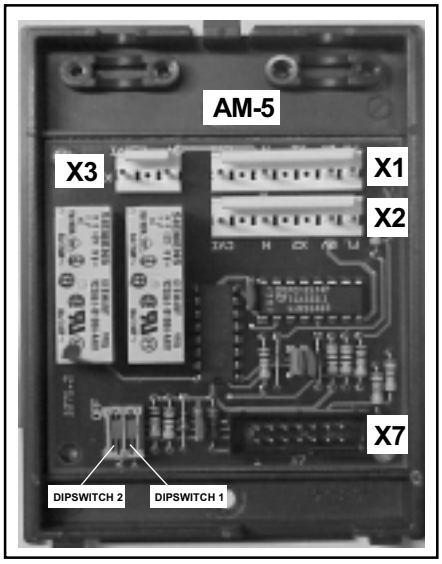

The Modular Boiler Drive (MBD), see Frame 20 for location, manages to check a two-burner group (2 x 40 = 80 kW). For boilers with outputs greater than 80 kW, 1, 2 or 3 supplementary AM-5 boards are included, each of them managing to check up to 2 burners. For example, a boiler with 5 burners (200 kW) is equipped with two supplementary AM-5 boards.

The supplementary boards have two small dip-switches, which must be positioned according to the diagram shown below. The setting operation is carried out during manufacture and must also be done on site in case of service replacement.

POSITION OF DIPSWITCHES

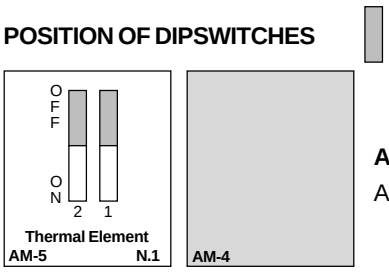

AM-5 SUPPLEMENTARY BOARD

AM-5 and AM-4 boards positioning for a MODULEX 120 or 160

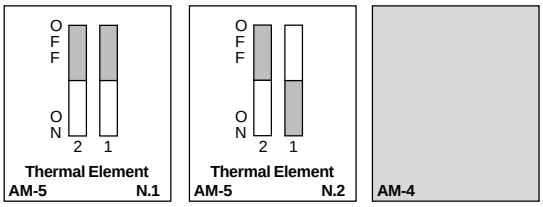

AM-5 and AM-4 boards positioning for a MODULEX 200 or 240.

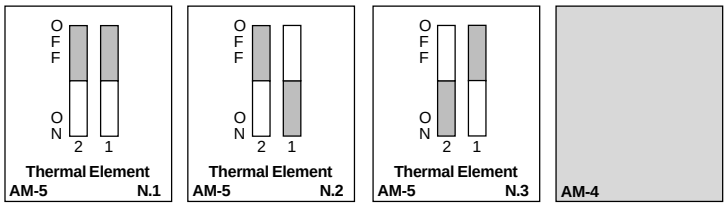

AM-5 and AM-4 boards positioning for a MODULEX 280.

23 EXAMPLES OF HEATING SYSTEMS

Heating system with DHW production (storage tank Output = Boiler Output) and mixing header.

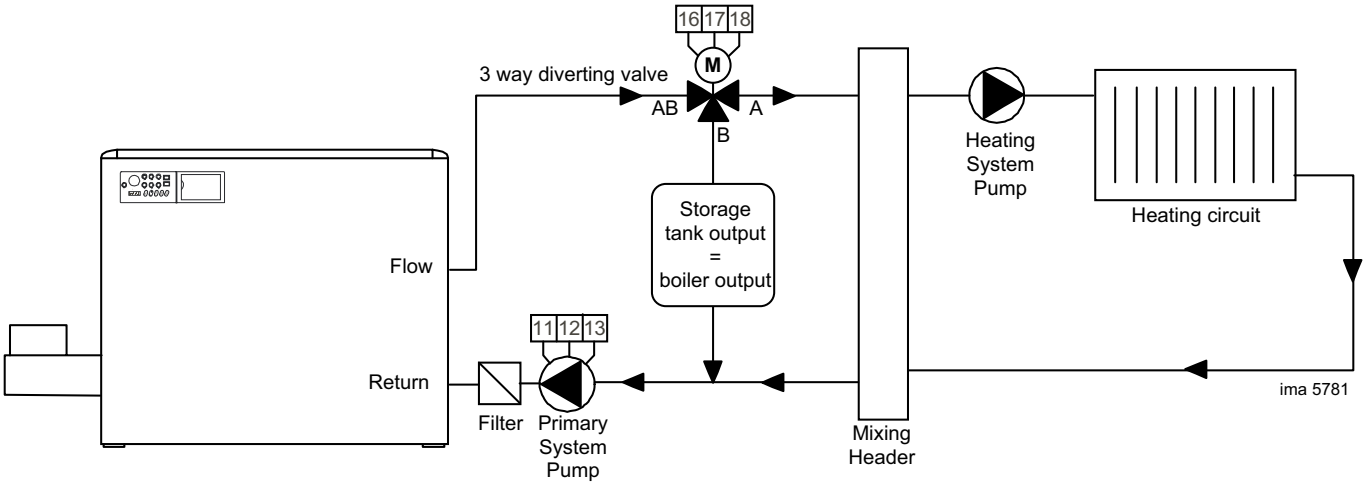

Note.

If PARA 'A' 2nd digit is set to 0, it means you wish to have a 3 way valve normally open towards the CH circuit (radiator circuits from AB to A). Upon DHW request, terminal 11 is energised which, through a relay, powers the 3-way valve, thus closing port A and opening port B. Simultaneously terminal 16 is energised which, through another relay, powers the primary system pump.

If PARA 'A' 2nd digit is set to 2, it means you wish to have a 3 way valve normally open towards the storage tank (DHW circuit from AB to B). Upon CH request, terminal 11 is energised which, through a relay, powers the 3-way valve, thus closing port B and opening port A. Simultaneously terminal 16 is energised which, through another relay, powers the primary system pump.

Heating System with one Group of Radiators (controlled by thermostatic valves)

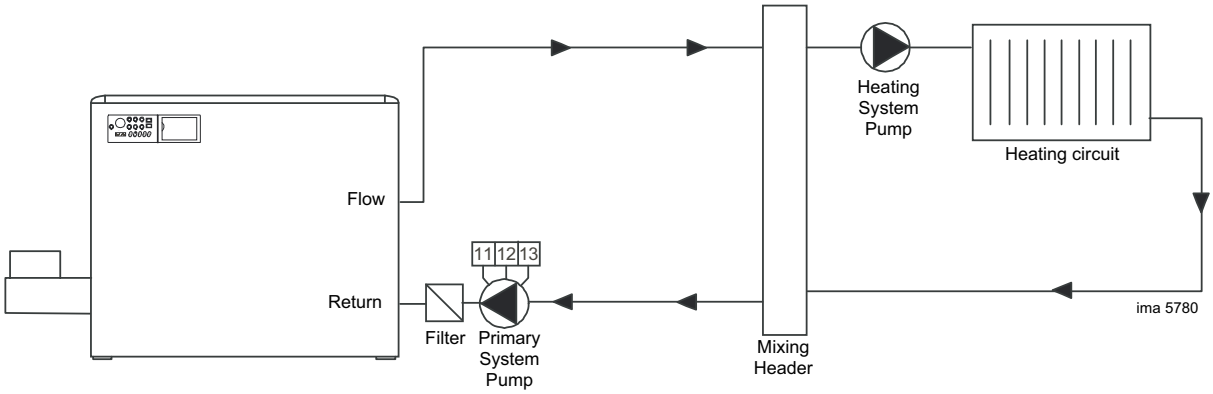

24 EXAMPLES OF HEATING SYSTEMS CONT'D

Installation of Two Boilers in Cascade, with Mixing Header and One or more Radiator Groups

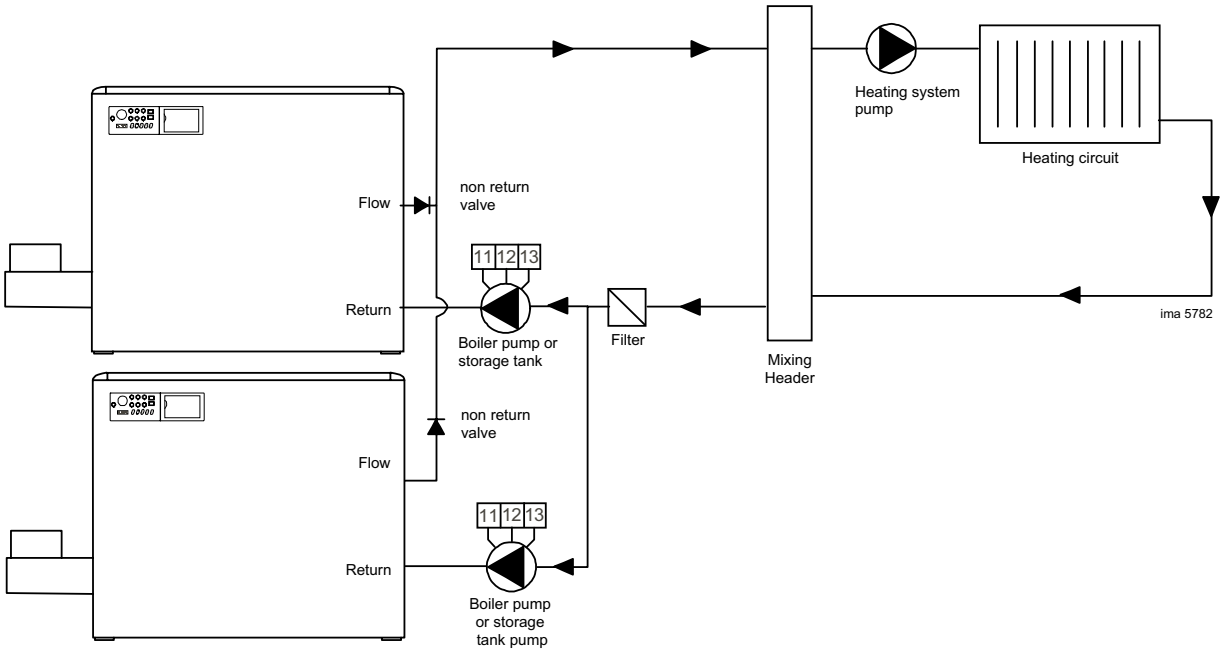

DHW Storage Tank with DHW Pump Installed on the Secondary Circuit, in Parallel with the Heating Circuit.

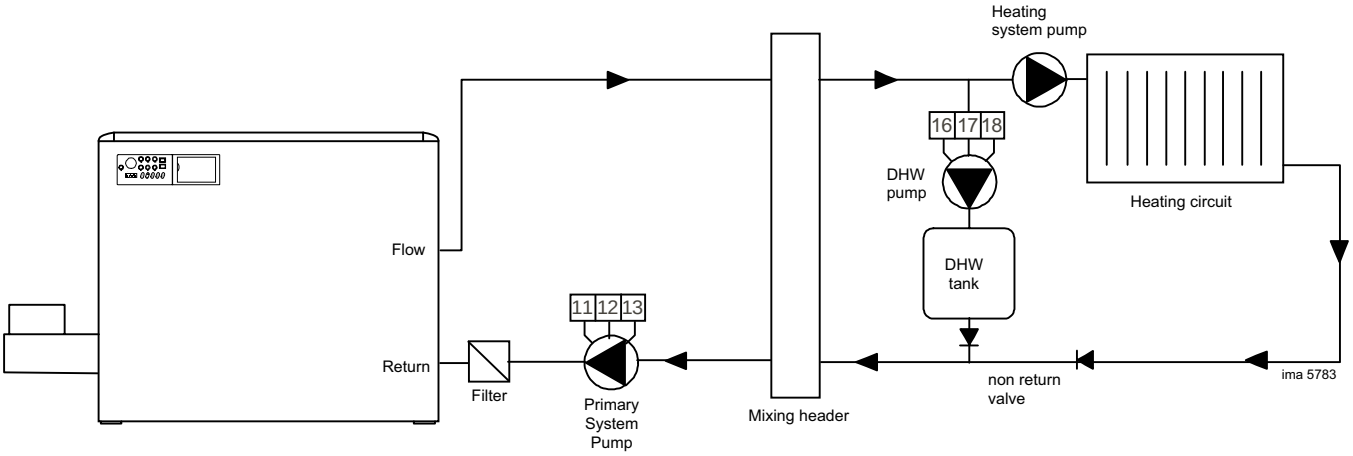

Note.

The primary system pump would be off while the DHW pump is running with PARA A second digit set to 'x1'. This would only give adequate circulation if the DHW pump was connected into the primary circuit, shown to the left of the mixing header above. However, in the case shown it will be necessary to run the primary system pump with the DHW pump for correct circulation. To achieve this set PARA A second digit to 'x0'.

25 CONTROLS OPERATION AND DISPLAY

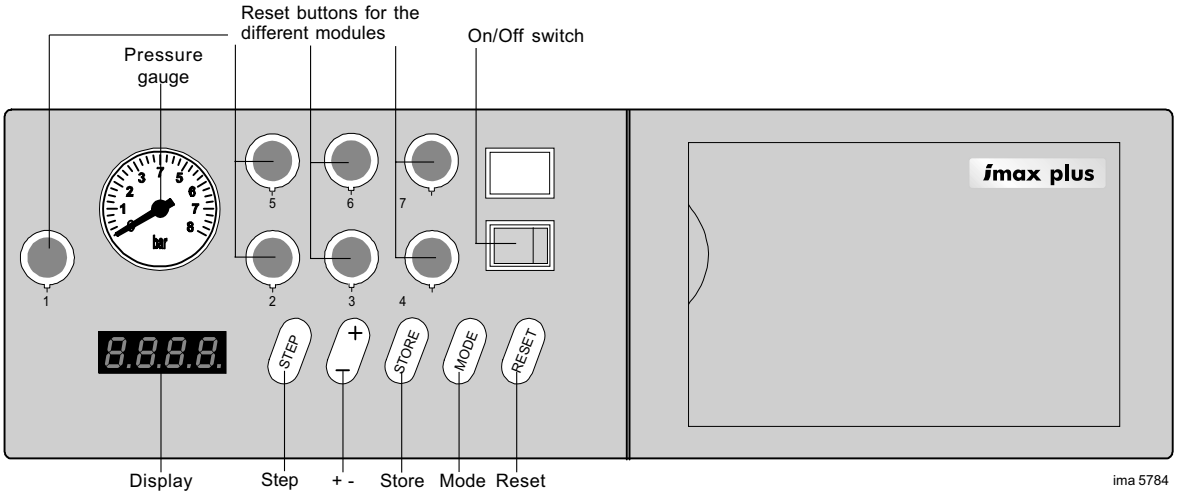

Operation and indications on the display (example with 7 modules)

During normal operation of the **imax plus**, the status of the appliance can be determined from the display.

Display Status	Boiler Status
0_xx	Standby: no heat request
1_xx	The fan of the burner to be ignited is running in prepurge
2_xx	The safety time of the burner to be ignited is operative
3_xx	Burner 'on' in CH mode
4_xx	Burner 'on' in DHW mode
5_xx	The fan of the burner to be ignited is being set to start speed.
6_xx	Burner 'off' in CH mode because a set value has been reached.
7_xx	Pump overrun in CH mode.
8_xx	Pump overrun in DHW mode.
9_xx	Burner 'off' in DHW mode because a set value has been reached.

The first digit shows the status of the boiler, the last 2 digits display the current flow temperature, except with status 1, 2 or 5 when the number indicates the burner module about to start.

All other displays refer to error messages, see Frames 46 and 47 for details.

On/Off Switch

The on/off switch turns the mains power on/off within the boiler. It does not isolate the boiler from the mains. Therefore it is important that the boiler is isolated at the external mains connection point before removing any casing panels.

Module and Reset Buttons

If a module locks out then its Reset Button becomes illuminated. To reset the module you must hold down this button whilst pressing the reset key.

Mode Key

The default mode of the boiler is standby. By pressing the mode key it is possible to change the mode.

By pressing the mode key once, PARA mode (abbreviation for parameter) is displayed. In this mode it is possible to change the settings of the boiler control module. The first 3 parameters are accessible to all, and the remaining parameters are accessible to an installer once he has entered the service code.

By pressing the mode key again, DATA mode is displayed. In this mode it is possible to read information on the operation of the boiler.

The following modes are only for use by trained installers and servicing engineers. Access is only available after entering the service code.

By pressing the mode key again, TEST mode is displayed. In this mode it is possible to run either the entire boiler or individual burners at max. or min. rate.

By pressing the mode key again, HOUR mode is displayed. In this mode it is possible to read the hours of each individual burner.

If no key is pressed for 15 minutes the boiler automatically returns to standby mode, unless operating in TEST mode.

Step Key

Having selected the mode required the step key is used to move through the options available to be changed or checked.

+/- Key

By pressing the top or bottom of this key it is possible to increase or decrease a value.

Store Key

After a setting has been changed, pressing the store button holds this new value in the memory. This key is also used to move through some options available as sub menus within DATA mode.

26 SERVICE CODE

To access the full list of parameters and the TEST and HOUR modes , it is first necessary to enter the service code. This is only to be used by trained installers and service engineers.
To enter the code:

Press and hold down the **mode** and **step** keys throughout the following operation.

The letter C will be displayed along with a randomly generated 2-digit number.

Use the **+/-** key to change the value to **79**.

Press the **store** key and the value will flash.

The **mode** and **step** keys can now be released and full access is now available.

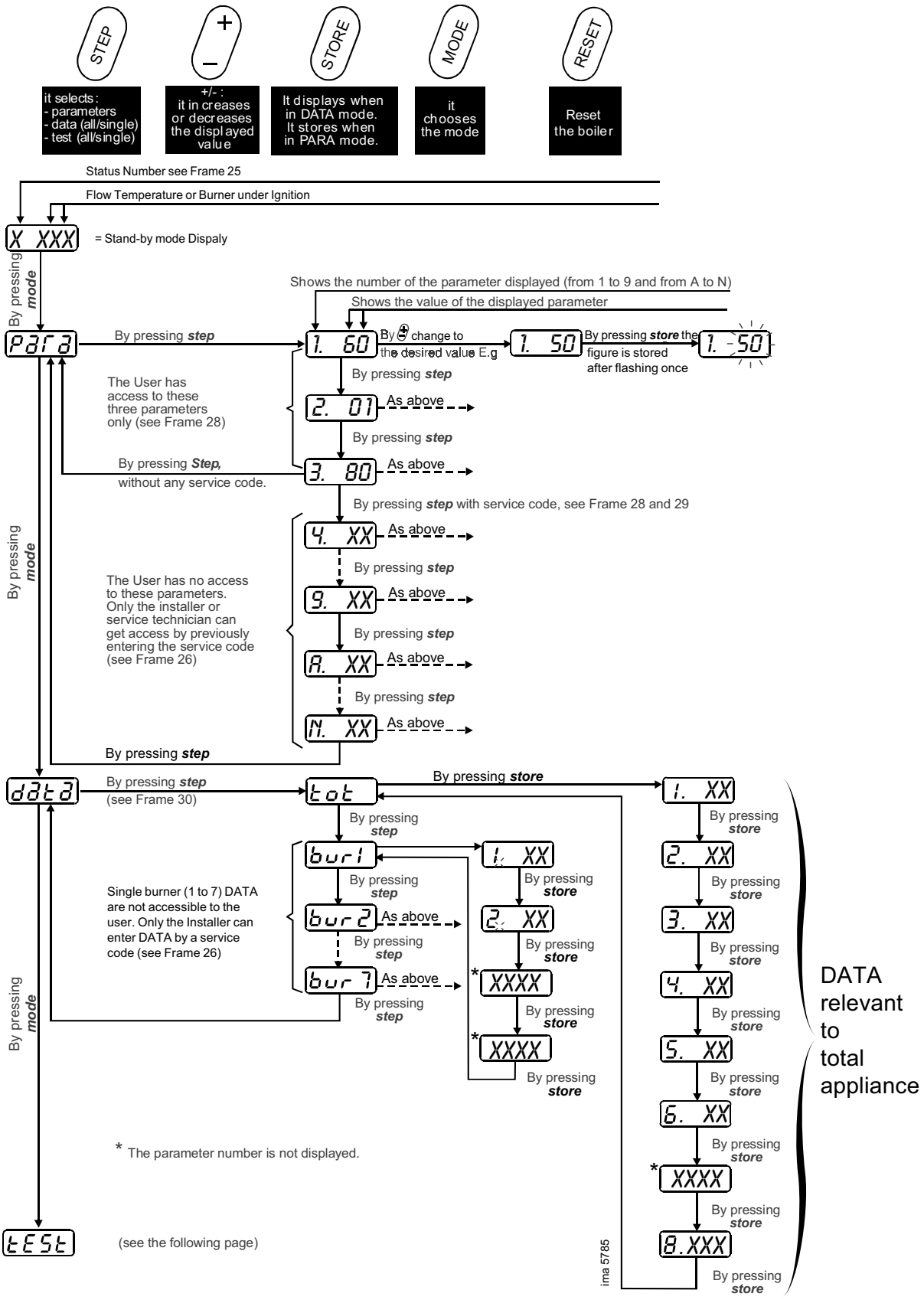

27 SERVICE CODE CONT'D

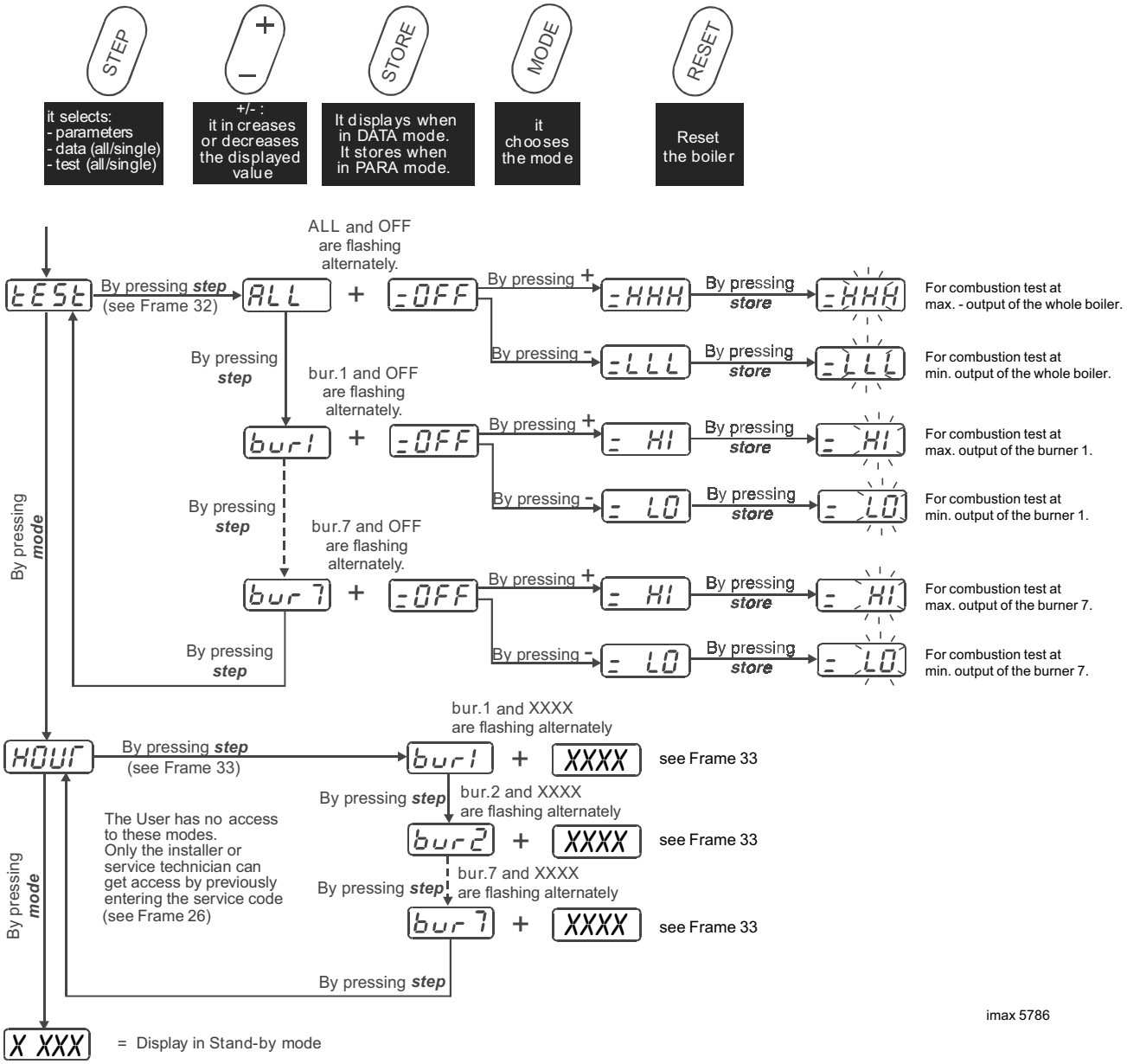

28 PARAMETER MODE

By pressing the ***mode*** key once, PARA mode (abbreviation for parameter) is displayed. In this mode it is possible to change the settings of the boiler control module.

Press	Display
MODE	PARA

Parameters accessible to user

Press	Display	Description	Lower Limit	Upper Limit	Factory Setting
STEP	1. 60	**DHW Storage Temperature Setpoint** (degC)	40	65	60
STEP	2. 01	**CH and DHW Options** 00 = CH & DHW are both off 01 = CH is on, DHW is off 02 = CH is on, DHW is off, System pump runs continuously 11 = CH & DHW are both on 12 = CH & DHW are both on, System pump runs continuously	-	-	11
STEP	3. 80	**Maximum CH Flow Temperature Setpoint** (degC)	30	90	80

Parameters accessible to trained installers and service engineers only, after entering service code.

Press	Display	Description	Lower Limit	Upper Limit	Factory Setting
STEP	4. 20	**Flow Temperature Minimum Design Setpoint** (degC) see Frame 34 for guidance	15	60	20
STEP	5. 20	**Outside Temperature Minimum Design Value** (degC) see Frame 34 for guidance	-20	10	-10
STEP	6. 20	**Minimum Flow Temperature Blocking Setpoint** (degC) see Frame 34 for guidance	15	30	25
STEP	7. 20	**Night time Setback Parallel Shift** (degC) see Frame 35 for guidance	00	40	10
STEP	8. 00	**1st digit - Outside Temperature Correction** (degC) see Frame 34 or 35 **2nd Digit - CH hysteresis** (degC)	-5x x0	5x x9	09
STEP	9. 20	**CH Pump Overrun Time** (minutes)	3	99	05

29 PARAMETER MODE CONT'D

Press	Display	Description	Lower Limit	Upper Limit	Factory Setting
STEP	A. 01	**1st Digit - CH type** 0x = Timer/Thermostat with optional weather compensation 1x = Outside Sensor with Night Time Set back 2x = BMS 0-10V Control **2nd Digit - DHW type** x0 = 3-way valve normally open to CH system x1 = DHW pump x2 = 3-way valve normally open to DHW tank			01
STEP	B. 20	**DHW set value increase** (degC) Temperature added to parameter 1 (see Frame 28) for boiler flow temperature required to satisfy DHW demand	5	25	20
STEP	C. 20	**Maximum fan speed CH** (hundreds rpm)	DO NOT ADJUST	DO NOT ADJUST	58
STEP	D. 20	**Maximum fan speed DHW** (hundreds rpm)	DO NOT ADJUST	DO NOT ADJUST	58
STEP	E. 20	**Minimum fan speed** (hundreds rpm)	DO NOT ADJUST	DO NOT ADJUST	22
STEP	F. 20	**Ignition fan speed** (% of parameter C)	DO NOT ADJUST	DO NOT ADJUST	75
STEP	G. 20	**Flow temperature set point at 0V** (degC) When using 0-10V BMS	0	50	30
STEP	H. 20	**Flow temperature set point at 10V** (degC) When using 0-10V BMS	50	90	80
STEP	J. 20	**1st digit - Number of module lockouts required to close alarm contacts** **2nd digit - DHW pump overrun time** (30 second increments)	1x x0	7x x9	2x to 7x x1
STEP	L. 20	**DHW hysteresis** (degC)	5	14	05
STEP	N. 20	**1st digit - Burner System** 0x = Ideal normal setup **2nd digit - Number of Modules**	DO NOT ADJUST	DO NOT ADJUST	0x x2 to x7

30 DATA MODE

By pressing the ***mode*** key twice, DATA mode is displayed. In this mode it is possible to read information on the operation of the boiler.

Press	Display
MODE Twice	DATA

Data Accessible to Installer and User. Data relevant to the whole boiler.

Press	Display	Description	Unit
STEP	TOT		
STORE	1. XX	Global flow temperature	ºC
	2. XX	Global return temperature	ºC
	3. XX	DHW temperature	ºC
	4. XX	Outside temperature	ºC
	5. XX	N/A	ºC
	6. XX	Flow temperature set point	ºC
	XXXX	Fan speed set point	rpm
	8. XX	Output calculated in % (100% per module)	%

Data Accessible only to the Installer by previously entering the service code. Data relevant to individual burners.

Press	Display	Press	Display	Description	Unit
STEP	BUR 1	STORE	1. XX	Local flow temperature, NTC1	ºC
			2. XX	Local return temperature, NTC2	ºC
			XXXX	Module 1 fan speed setpoint	rpm
			XXXX	Module 1 actual fan speed	rpm
STEP	BUR 2	STORE	1. XX	Local flow temperature, NTC1	ºC
			2. XX	Local return temperature, NTC2	ºC
			XXXX	Module 2 fan speed set point	rpm
			XXXX	Module 2 actual fan speed	rpm
STEP	BUR 3	STORE	1. XX	Local flow temperature, NTC1	ºC
			2. XX	Local return temperature, NTC2	ºC
			XXXX	Module 3 fan speed set point	rpm
			XXXX	Module 3 actual fan speed	rpm
STEP	BUR 4	STORE	1. XX	Local flow temperature, NTC1	ºC
			2. XX	Local return temperature, NTC2	ºC
			XXXX	Module 4 fan speed set point	rpm
			XXXX	Module 4 actual fan speed	rpm
STEP	BUR 5	STORE	1. XX	Local flow temperature, NTC1	ºC
			2. XX	Local return temperature, NTC2	ºC
			XXXX	Module 5 fan speed set point	rpm
			XXXX	Module 5 actual fan speed	rpm

31 DATA MODE CONT'D

Press	Display	Press	Display	Description	Unit
STEP	BUR6	STORE	1. XX	Local flow temperature, NTC1	ºC
			2. XX	Local return temperature, NTC2	ºC
			XXXX	Module 6 fan speed set point	rrpm xxxx
			XXXX	Module 6 actual fan speed	rpm xxxx
STEP	BUR7	STORE	1. XX	Local flow temperature, NTC1	ºC
			2. XX	Local return temperature, NTC2	ºC
			XXXX	Module 7 fan speed set point	rrpm xxxx
			XXXX	Module 7 actual fan speed	rpm xxxx

32 TEST MODE

By pressing the ***mode*** key three times, TEST mode is displayed. In this mode it is possible to run either the entire boiler or individual burners at max. or min. rate. This mode is useful for measuring the combustion and gas rates.

Press	Display
MODE Three times	TEST

Press	Display
STEP	ALL + =OFF

FLASHING ALTERNATELY

Press	Display	Press	Display	Press	Description
STEP	ALL	+ -	=OFF =HHH =LLL	STORE	Test mode off for all burner modules Test mode high for all burner modules Test mode low for all burner modules
STEP	BUR.1	+ -	=OFF =HI =LO	STORE	Test mode off for burner module 1 Test mode high for burner module 1 Test mode low for burner module 1
STEP	BUR.2	+ -	=OFF =HI =LO	STORE	Test mode off for burner module 2 Test mode high for burner module 2 Test mode low for burner module 2
STEP	BUR.3	+ -	=OFF =HI =LO	STORE	Test mode off for burner module 3 Test mode high for burner module 3 Test mode low for burner module 3
STEP	BUR.4	+ -	=OFF =HI =LO	STORE	Test mode off for burner module 4 Test mode high for burner module 4 Test mode low for burner module 4
STEP	BUR.5	+ -	=OFF =HI =LO	STORE	Test mode off for burner module 5 Test mode high for burner module 5 Test mode low for burner module 5
STEP	BUR.6	+ -	=OFF =HI =LO	STORE	Test mode off for burner module 6 Test mode high for burner module 6 Test mode low for burner module 6
STEP	BUR.7	+ -	=OFF =HI =LO	STORE	Test mode off for burner module 7 Test mode high for burner module 7 Test mode low for burner module 7

33 HOUR MODE

By pressing the ***mode*** key four times, HOUR mode is displayed. In this mode it is possible to read the hours run of each individual burner. Press the **step** key to select the burner whose hours run you want to read. The burner number as well as the number of hours run will flash alternatively. See the table below to interpret the readings.

To reset all burner hours to zero, first of all the text **HOUR** should be displayed. Now press and hold the **STORE** key for 2 seconds. The text **CLR** will appear to indicate that all hours have been reset to zero.

Display	Operation time range	Multiplication coefficient
x.xxx	From 0.000 to 9.999 hours	Multiply the figures before decimal point by 1000 and the figures after comma by 1
xx.xx	From 10.00 to 99.99 hours	Multiply the figures before decimal point by 1000 and the figures after comma by 10
xxx.x	From 100.0 to 999.9 hours	Multiply the figures before decimal point by 1000 and the figures after comma by 100

34 HEATING MODE OPERATION

1. Timer / Thermostat with Optional Weather Compensation

The timer/thermostat generates and ends the call for heat by opening and closing the circuit connected across terminals 5 & 6. Without the outside sensor connected, PARA 3 fixes the boiler set flow temperature. If the outside sensor is connected (automatic detection) then the set flow temperature varies with changes in outside temperature (heating curve) in accordance with graph 3.

Note.

Use of the outside sensor reduces cycling and increases the efficiency of the boiler by reducing the return temperature, which allows the boiler to operate in condensing mode.

Graph 3

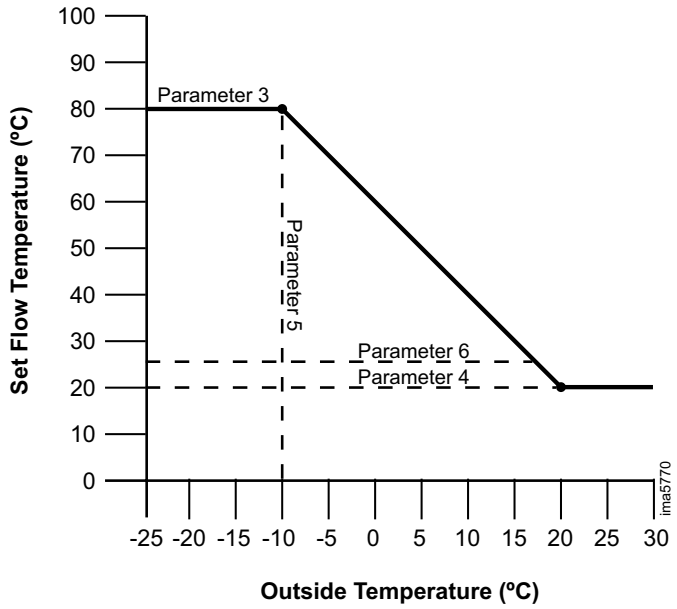

The heating curve can be adjusted using the following parameters (see also Frame 26 and 28):

Parameter 3: Highest set flow temperature required on the coldest day.

Parameter 4: Lowest set flow temperature required on a warm day (20ºC).

Parameter 5: The coldest day the heating system is designed to work against.

Parameter 6: If according to the heating curve the required set flow temperature is lower than this value (parameter 6), then the call for heat is blocked and the boiler will not fire.

Parameter 8: If the outside sensor is not reading the outside temperature accurately, it is possible to adjust the reading using this parameter by +/- 5ºC.

The burner will switch on when the Global Flow Temperature (NTC1) is less or equal to the set flow temperature +5ºC - CH hysteresis (parameter 8 2nd digit). The burner 'on' will however be blocked if the set flow temperature is less or equal to the Blocking CH Flow Temperature (parameter 6).

The burner will switch off when the Global Flow Temperature (NTC1) is greater than the set flow temperature +5ºC.

35 HEATING MODE OPERATION CONT'D

2. Outside Sensor with night Time Set Back

With the boiler configured to run with an outside sensor, there is a permanent call for heat. The set flow temperature varies with changes in outside temperature (heating curve) in accordance with graph 4. With a timer connected across terminals 5 & 6, the set flow temperature is set back by a fixed amount in response to the circuit being open. This allows the building temperature to be dropped during periods e.g. night-time.

The heating curve can be adjusted using the following parameters (see also Frames 26 and 28):

Parameter 3: Highest set flow temperature required on the coldest day.

Parameter 4: Lowest set flow temperature required on a warm day (20ºC).

Parameter 5: The coldest day the heating system is designed to work against.

Parameter 6: If according to the heating curve the required set flow temperature is lower than this value (parameter 6), then the call for heat is blocked and the boiler will not fire.

Parameter 7: When a timer opens the circuit connected across terminals 5 & 6, the set flow temperature is reduced by this value.

Parameter 8: If the outside sensor is not reading the outside temperature accurately, it is possible to adjust the reading using this parameter by +/-5ºC.

Graph 4

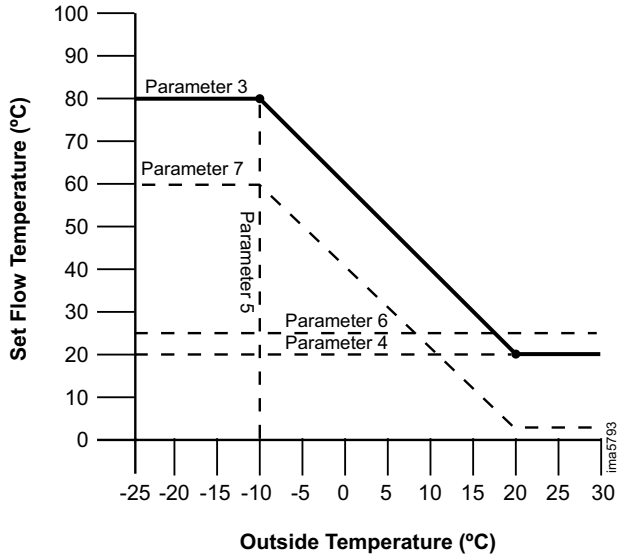

The burner will switch on when the Global Flow Temperature (NTC1) is less or equal to the set flow temperature +5ºC - CH hysteresis (parameter 8 2nd digit). The burner on will however be blocked if the set flow temperature is less or equal to the Blocking CH Flow Temperature (parameter 6).

The burner will switch off when the Global Flow Temperature (NTC1) is greater than the set flow temperature +5ºC.

3. BMS Control

When controlling the boiler with a BMS the set flow temperature is controlled by a 0-10V D.C. signal. The relationship between the signal voltage and the set flow temperature (heating curve) is given in graph 5.

The heating curve can be adjusted using the following parameters (see also Frames 26, 28 and 29):

Parameter G: Required set flow temperature at 0V.

Parameter H: Required set flow temperature at 10V.

Parameter 6: If according to the heating curve the required set flow temperature is lower than this value (parameter 6), then the call for heat is blocked and the boiler will not fire.

The burner will switch on when the Global Flow Temperature (NTC1) is less or equal to the set flow temperature +5ºC - CH hysteresis (parameter 8 2nd digit). The heat demand will however be blocked if the set flow temperature is less or equal to the Blocking CH Flow Temperature (parameter 6).

The burner will switch off when the Global Flow Temperature (NTC1) is greater than the set flow temperature + 5ºC.

Graph 5

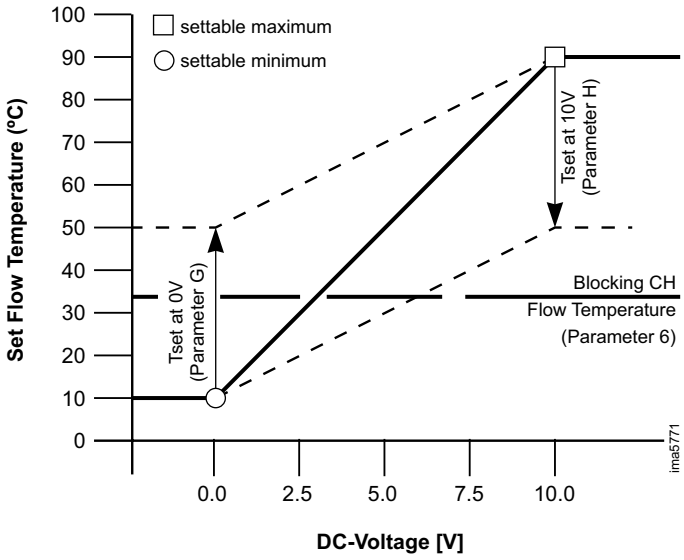

36 FROST PROTECTION

The **imax plus** boiler has built into its control system the facility to protect only the boiler against freezing.

If the boiler global flow temperature falls below 7ºC, the primary system pump circulates water around the water circuit. The pump will only switch off when the global flow temperature exceeds 10ºC.

If the boiler global flow temperature falls below 3ºC, the boiler will fire at minimum rate in CH mode. When the global flow temperature exceeds 10ºC the burner switches off and the pump enters the overrun period before switching off.

37 COMMISSIONING AND TESTING

A. ELECTRICAL INSTALLATION

1. Checks to ensure electrical safety should be carried out by a competent person.
2. ALWAYS carry out the preliminary electrical system checks, i.e. earth continuity, polarity, resistance to earth and short circuit, using a suitable meter.

B. GAS INSTALLATION

1. The whole of the gas installation, including the meter, should be inspected and tested for soundness and then purged in accordance with the recommendations of the relevant standards listed on page 4.

38 INITIAL LIGHTING

1. Check that the system has been filled and the boiler is not air locked - air in the boiler could damage the heat exchanger. The air vent located in the boiler flow manifold must never be shut off.
2. Check that all drain cocks are closed and any valves in the flow and return are open.
3. Check that the GAS SERVICE COCK IS ON.
4. Fill the condensate trap with water before putting the unit into operation (see frame 11 for guidance).
5. Check the indication on the pressure gauge (sealed system installations). If the pressure is less than 0.8 bar the system should be filled up first.
6. Switch the electricity supply ON and check all external controls are calling for heat. Check the control panel switch is on.
7. The boiler will commence with the ignition cycle as follows:
   - After 5 seconds the system pump and if required DHW pump/valve are energised.
   - The CVI of the first module chosen to fire is energised.
   - After 5 seconds the fan of this module is started and run at the starting speed for 10 seconds to allow for pre-purge. Note. The fans of the other modules also run to balance the flueways.
   - Whilst operating in pre-purge the air pressure switch, actuated by the fan, switches from C-NO (open position) to C-NC (closed position).
   - After pre-purge the ignition spark starts and the gas valve is opened.
   - If after the safety time no ignition is detected the gas valve is closed and the ignition spark stopped. After 5 seconds the ignition sequence is started again.
   - If after 3 attempts no ignition is detected then the module is put in lock out mode and the relevant red push button is illuminated on the controls panel.
   - To reset the burner hold down the illuminated button and press the reset button.
   - The remaining modules will follow this ignition sequence one at a time.
8. Operate the boiler for 20 minutes and check the gas rate. See Frames 27 and 32 for details on how to set the boiler to run at maximum rate. Then check the CO_2 levels at minimum rate, see Frame 39.

39 BURNER PRESSURE ADJUSTMENT

The following burner pressure adjustment must be followed when service replacement of a gas valve is required. This procedure should also be followed to check if adjustment is required during commissioning and servicing.

1. Unscrew the sampling point cap and insert the analyser sensor.
2. In Test mode (see Frames 27 & 32) set burner 1 to low with all other burners OFF.
3. Read the percentage of CO_2, which must be between 8.8 and 9.0%. If the reading is not between these values, then adjustment of the gas valve is required.

Note.

If the CO_2 reading is very low, check for blockages on the burner, flue and heat exchanger.

4. To adjust the gas valve using screw 'A', first remove the protective cap using a 'high' torque tool. By turning the adjustment screw 'A' clockwise the CO_2% increases, while it decreases anti clockwise.
5. Switch burner 1 OFF and repeat procedure for remaining burners.

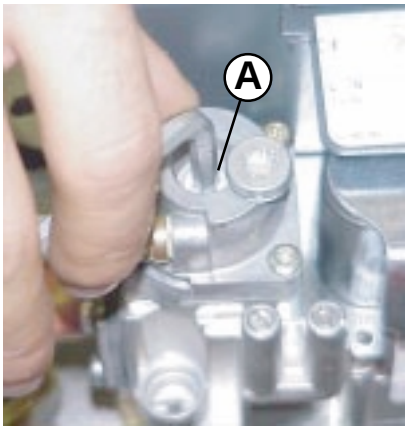

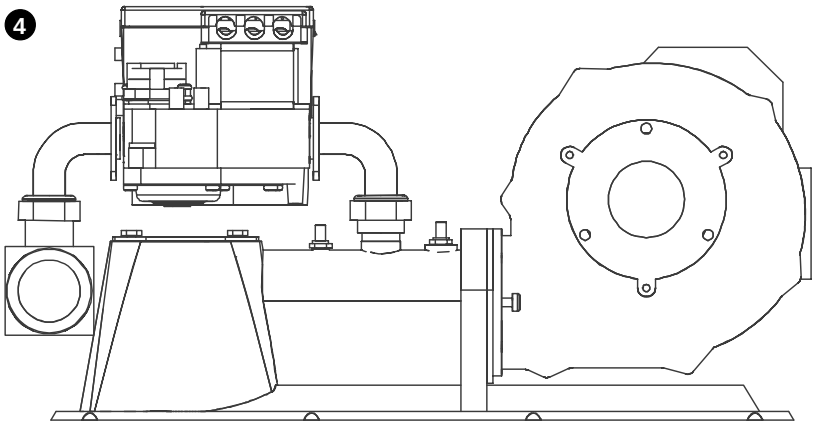

ima 7238

40 GENERAL CHECKS

Make the following checks for correct operation.

1. The correct operation of ANY secondary system controls should be proved. Operate each control separately and check that the main burner or circulating pump, as the case may be, responds.
2. Water circulation system;
   - **a.** With the system HOT examine all water connections for soundness.
   - **b.** With the system still HOT, turn off the gas, water and electricity supplies to the boiler and drain down to complete the flushing process.
   - **c.** Refill and vent the system, clear all air locks and again check for water soundness.
   - **d.** Balance the system.
3. Check the condensate drain for leaks and check it is discharging correctly.
4. Finally set the controls to the User's requirements.

41 HANDING OVER

Routine Operation

Full instructions covering routine lighting and operation of the boiler are given in the User's Instructions. Draw the attention of the boiler owner or their representative to these instructions. Give a practical demonstration of the lighting and shutting down of the boiler.

Describe the function of the boiler and system controls and show how they are adjusted and used.

Hand these Installation and Servicing/User Instructions and Log book to the customer and request him to keep them in a safe place for ready reference.

IMPORTANT. Point out to the owner that the boiler must have regular maintenance and cleaning, at least annually, in order to ensure reliable and efficient operation. Regular attention will also prolong the life of the boiler and should preferably be performed at the end of the heating season.

After servicing, complete the service section of the Log book and return to the owner or their representative.

Recommend that the contract for this work should be made with the regional gas authority or a CORGI registered heating installer, or in IE a comptent person.

42 SAFETY

It is the law that any service work must be carried out by a registered CORGI installer, or in IE a competent person.

WARNING. **Always turn off the gas supply at the gas service cock, and switch off and disconnect the electricity supply to the appliance and any external controls before servicing or replacing components.**

IMPORTANT.

After completing the servicing or replacement of components always:

- Test for gas soundness after reconnecting the gas at the inlet connection and at all the individual gas valve inlets.
- Check the water system is correctly filled and free from air.
- Check all casing panels are correctly fitted and secured and earth leads connected.
- As each burner is ignited, immediately check the gas valve connections to the burner hood for gas soundness, and check the burner seal for soundness.
- With the system hot, examine all water connections for soundness.
- Check the gas rate and measure the combustion CO/CO_2 content. Refer to Frames 27 and 32 for reference on how to run the boiler at maximum rate. The CO/CO_2 ratio of the flue gas should not be greater than 0.004 ratio.
- Check burner pressure adjustment, see Frame 39.
- Complete the boiler log book.
- Carry out functional checks as appropriate.

43 SERVICING SCHEDULE

To ensure the continued safe and efficient operation of the appliance it is recommended that it is checked at regular intervals and serviced as necessary. The frequency of servicing will depend upon the installation condition and usage but should be carried out at least annually.

Caradon Ideal Limited does not accept any liability resulting from the use of unauthorised parts or the repair and servicing of appliances not carried out in accordance with the company's recommendations and specifications.

Before Servicing

1. Light the boiler and carry out function checks, noting any operational faults.
2. Run the boiler for 10 minutes and then check the gas consumption rate and measure the combustion CO/CO_2 content. For reference on how to force the boiler to maximum rate see Frames 27 and 32.

Step One - Disassembly

1. Turn off the gas supply at the gas service cock and disconnect the gas supply from the boiler gas manifold. Switch off and disconnect the electricity supply to the appliance and any external controls.
2. Remove the 2 screws securing the top panel to front/back panels. Now pull all the casing panels off their latch studs and remove, taking care to disconnect their earth leads.
3. Remove the cover of the fan box 'A' by removing screws 'B'.
4. Remove the grommets 'C' on the bottom of the fan box to gain access to the securing bolts.
5. Remove the bolts 'D1 - D2 - D3 - D4' securing the burners and fan box to the combustion chamber, using a 13mm socket wrench and ring spanner.
6. Remove the 'E' fixing screws on the 2 sides of the gas manifold. Remove the sheet metal protections 'F' on the 2 sides of the gas manifold.

3
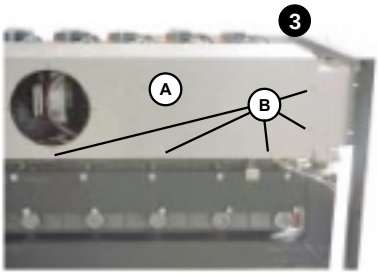

4
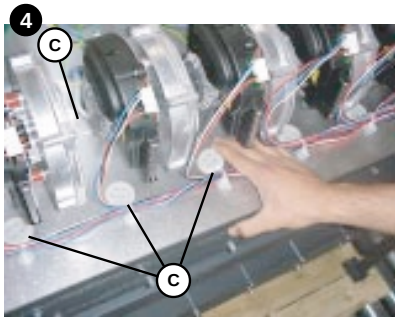

5
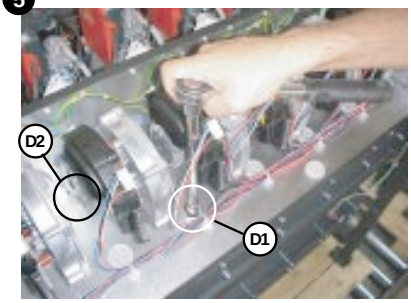

5

5
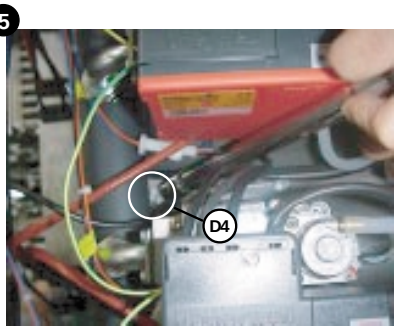

6
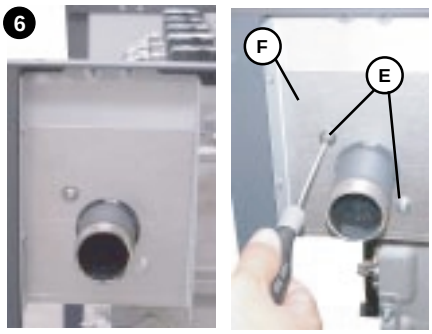

44 SERVICING SCHEDULE CONT'D

7. Lift the gas manifold and resecure, at the 2 sides, in a position 10mm higher than the standard one. It is possible to get this position by securing the gas manifold flanges in correspondence with holes 'G', using the screws removed from holes 'E'.
8. Lift the fan box/burner hoods 'L' up at the rear and locate the supporting poles 'I' in the holes 'M'.
9. Gain access to the condensate sump 'N' by removing the cleaning plate 'O' or flue manifold (dependant on position of fixing screw for heat exchanger baffle 'P'). Remove screw securing heat exchanger baffle 'P' and lower into bottom of condensate sump.

Step Two - Cleaning

10. Carefully remove the burner gaskets which need replacing with each cleaning of the burner.
11. Lift out the individual burners and blow compressed air through the metal fibre side of the burner. Do not brush the metal fibre side of the burner. If they show any signs of damage they must be replaced.
12. Inspect the heat exchanger (some aluminium oxide build up in the heat exchanger is quite normal). To clean the heat exchanger, if necessary, spray water down the flueways taking care not to wet the electrodes or any other electrical equipment.
13. Inspect the electrodes for any signs of distortion and check for cracks in the ceramic. Replace if necessary.
14. Remove one or two inspection covers from the condensate sump. Scrape out any deposits.
15. Blow compressed air down the flueways.
16. Check the flue terminal is unobstructed and that the flue system is sealed correctly.
17. Disassemble the condensate trap and flush through with water to remove any debris.

Step Three - Rebuilding

18. Reassemble in reverse order, using new burner gaskets.
19. Check the condensate trap is full of water before firing the boiler.
20. Refer to Frame 42 for reference to final safety checks.
21. Complete the Log Book.

7

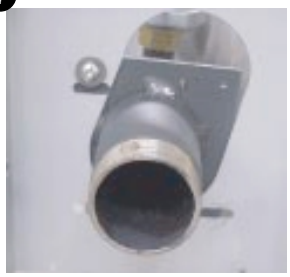

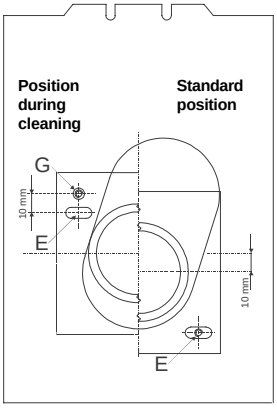

8

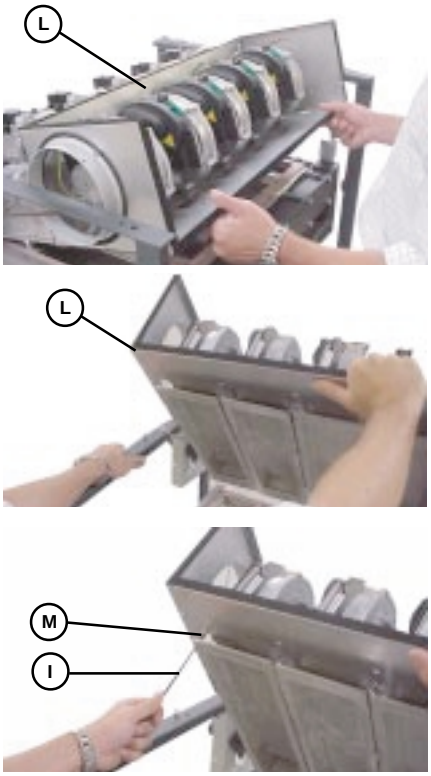

9

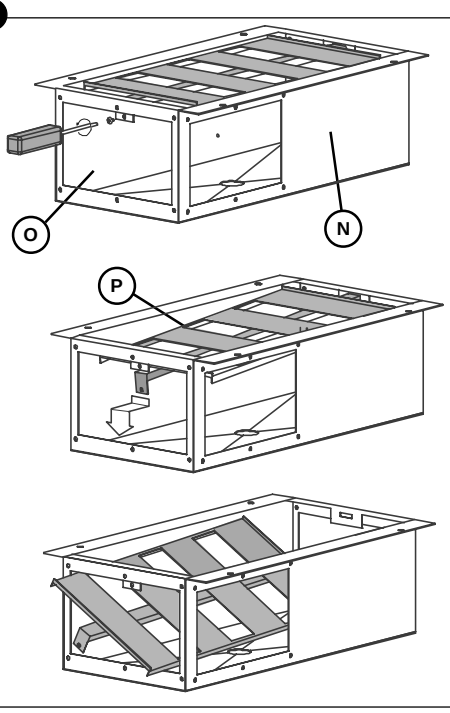

11

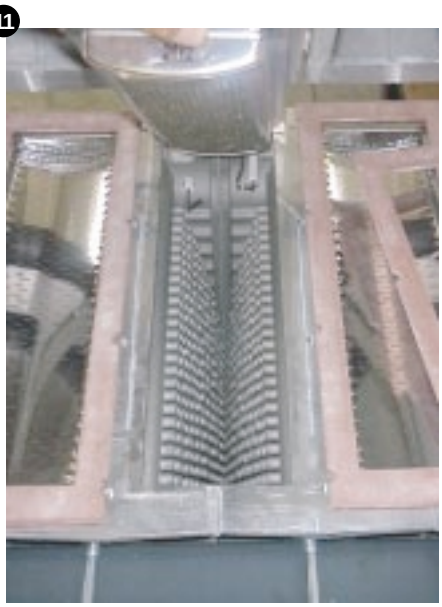

45 FAULT FINDING

SAFETY

Refer to Frame 42 for essential guidance on safety when carrying out fault finding.

The preliminary electrical system checks are the FIRST electrical checks to be carried out during a fault finding procedure.

On completion of any service/fault finding task which has required the breaking and remaking of electrical connections the following checks MUST be repeated:

a Earth continuity
b Polarity
c Resistance to earth

BLANK DISPLAY

In the case of a blank display, check the following:

- Check the ribbon cable is correctly fitted to the display board.
- Check that mains voltage is provided across terminals 19 and 20.
  - If no power available, check external fuse.
- Check the ON/OFF switch is set to ON.
- Check the fuse '2AF' mounted on the MBD.
- Before replacing any blown fuses check for short circuits on the 230V circuit, with particular attention given to the wiring of external pumps or valves. Loads in excess of 1A per external pump/valve will blow the fuse '2AF'.
- If power supply and fuses are OK, the MBD needs changing.

WARNING. **The external fuse and fuse '2AF' are part of the 230V circuit. Make sure the power is off before checking.**

BOILER DOES NOT SATISFY CH REQUEST

- Check the connections of all external controls are correct.
- Check the condition of all wiring to external controls.
- Check the CH pump and its wiring.
- Check that the parameters are set correctly for the chosen control method.

BOILER DOES NOT SATISFY DHW REQUEST

- Check the tank sensor/thermostat and its wiring.
- Check the 3-way valve/DHW pump and its wiring.
- Check that the parameters are set correctly.

BURNER MODULE LOCKOUTS

Note. *To carry out checks on individual burner modules, it is advised that all external controls are switched to 'OFF' so no heat demand is placed on the boiler. Individual burners can then be fired in TEST mode, see Frames 26 & 32.*

When a burner module locks out, the corresponding red reset button illuminates on the fascia.

Note. *The blinking red LED on a CVI board indicates that it is functioning correctly.*

To reset the boiler, press and hold the illuminated red reset buttons of each failed module and press the reset button on the fascia.

The air pressure switch does not close:

In this situation the fan runs for 60 seconds, then goes into lockout, illuminating the relevant push button on the fascia.

- Check the condition and connections of the silicon tubes to the air pressure switch.
- Measure the signal across the air pressure switch. If greater than 53 Pa replace the air pressure switch. If less than 53 Pa check the following:
  - Check for any blockages in the passage of air through the boiler and then out through the flue.
  - Check that the flue has been sized correctly and does not create excessive resistance (>100 Pa).
  - Check for dirt build up on the back of the burner skin (see servicing section).
  - Check operation of fan.

High limit thermostat is open:

In this situation the module goes into lockout, and after approximately 30 seconds the relevant push button on the fascia becomes illuminated.

If the module has overheated:

- Check for presence of water in the heat exchanger.
- Check for adequate water circulation through the section.

If the module has not overheated:

- Replace faulty overheat thermostat.

No flame is detected despite visible ignition through sightglass:

- Check the connection to the ionisation electrode.
- Check for any distortion of the ionisation electrode, or cracking of the ceramic.
- Check that the resistance between the probe and earth is not zero.
- If all above OK, replace CVI board.

No ignition:

- Check for a visible spark on the ignition electrode through the sightglass. If not visible, check condition of electrode and wiring. If all OK replace CVI board.
- Check the gas valve opens correctly. Due to the nature of the gas valve a burner pressure is difficult to measure. Therefore it is advised that a manometer is connected to the gas valve inlet pressure test point. When the gas valve is energised a drop in pressure will be visible, if the valve has opened correctly. If this is not the case, remove the CVI board from the gas valve and measure the gas valve solenoid resistance values. V1 should measure approximately 2.9k Ω, V2 should measure approximately 1.4k Ω. If measured values differ significantly from these, replace the valve. If values are OK replace CVI board.
- If ignition electrode and gas valve are functioning correctly, check the condition of burner. Refer to service section on how to clean burner, and replace if any signs of damage are evident.

Detail of electrical connections on the 'CVI' control boards mounted directly onto the gas valves.

WARNING!
To disconnect the ignition lead from the CVI hold directly on the terminal (fast-on) and not on the lead.

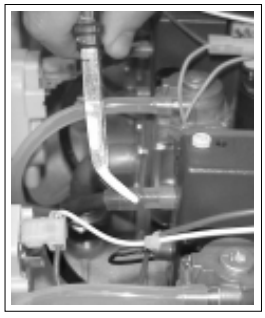

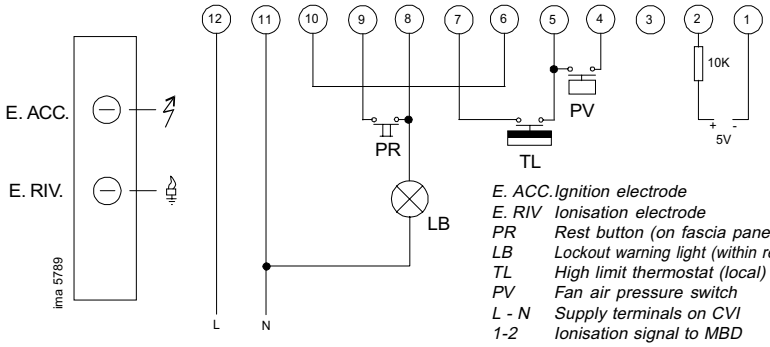

E. ACC. Ignition electrode
E. RIV Ionisation electrode
PR Rest button (on fascia panel)
LB Lockout warning light (within reset button)
TL High limit thermostat (local)
PV Fan air pressure switch
L - N Supply terminals on CVI
1-2 Ionisation signal to MBD

46 FAULT FINDING CONTD

ERROR CODES RELATED TO LOCAL OPERATING TEMPERATURE SENSORS

Error Code	Description	Alarm
L1 4	Local Temperature NTC 1 short circuit	No
L2 4	Local Temperature NTC 2 short circuit	No
L3 4	Local Temperature NTC 3 short circuit	No
L4 4	Local Temperature NTC 4 short circuit	No
L5 4	Local Temperature NTC 5 short circuit	No
L6 4	Local Temperature NTC 6 short circuit	No
L7 4	Local Temperature NTC 7 short circuit	No
L8 4	Local Temperature NTC 8 short circuit	No
L1 3	Local Temperature NTC 1 open circuit	No
L2 3	Local Temperature NTC 2 open circuit	No
L3 3	Local Temperature NTC 3 open circuit	No
L4 3	Local Temperature NTC 4 open circuit	No
L5 3	Local Temperature NTC 5 open circuit	No
L6 3	Local Temperature NTC 6 open circuit	No
L7 3	Local Temperature NTC 7 open circuit	No
L8 3	Local Temperature NTC 8 open circuit	No
E31	Global Flow NTC short circuit	No
E36	Global Flow NTC open circuit	No
E32	Global Return NTC short circuit	No
E37	Global Return NTC open circuit	No

Possible Causes and Solutions

- *The Local Flow Temperature NTC of the aluminium section is defective.*
- *The Global Return Temperature NTC is defective.*
- *The water circulation through the aluminium section involved is insufficient*

Note. *In the case of more than one NTC failure at the same time, the most important one prevails.*
E.g. "E" failures prevail on "L" failures; if "L" codes are equivalent, the code with the lowest first digit prevails; in the case that the first digits are equivalent, the code with the highest second digit prevails.

ERROR CODES RELATED TO LOCAL OVERHEAT TEMPERATURES

Error Code	Description	Alarm
L1 2	Local Flow Temperature of Aluminium section 1 > 98ºC	No
L2 2	Local Flow Temperature of Aluminium section 2 > 98ºC	No
L3 2	Local Flow Temperature of Aluminium section 3 > 98ºC	No
L4 2	Local Flow Temperature of Aluminium section 4 > 98ºC	No
L5 2	Local Flow Temperature of Aluminium section 5 > 98ºC	No
L6 2	Local Flow Temperature of Aluminium section 6 > 98ºC	No
L7 2	Local Flow Temperature of Aluminium section 7 > 98ºC	No
L8 2	Local Flow Temperature of Aluminium section 8 > 98ºC	No
L1 1	The difference between the Global Return Temp. and the Local Flow Temp. of Aluminium section 1 is too high	No
L2 1	The difference between the Global Return Temp. and the Local Flow Temp. of Aluminium section 2 is too high	No
L3 1	The difference between the Global Return Temp. and the Local Flow Temp. of Aluminium section 3 is too high	No
L4 1	The difference between the Global Return Temp. and the Local Flow Temp. of Aluminium section 4 is too high	No
L5 1	The difference between the Global Return Temp. and the Local Flow Temp. of Aluminium section 5 is too high	No
L6 1	The difference between the Global Return Temp. and the Local Flow Temp. of Aluminium section 6 is too high	No
L7 1	The difference between the Global Return Temp. and the Local Flow Temp. of Aluminium section 7 is too high	No
L8 1	The difference between the Global Return Temp. and the Local Flow Temp. of Aluminium section 8 is too high	No

Possible Causes and Solutions
As for the above mentioned conditions, they can be due to wiring break, short circuit or failure of the NTC involved, or over heating of the aluminium section.

47 FAULT FINDING CONTD

ERROR CODES RELATED TO GAS PRESSURE, AM-4 AND AM-5

Error Code	Description	Alarm
E26	The Min. Gas Pressure Switch is open	No
E90	The module AM-4 has not been detected	No
E91	The module AM-5 has not been detected (or number of AM-5 modules is wrong)	No
Possible Causes and Solutions *For E26 check the dynamic inlet gas pressure: it MUST be a minimum of 15 mbar.* *For E90 check the dipswitches position (see Frame 21)* *For E91 check the dipswitches position (see Frame 22)*		

ERROR CODES RELATED TO GLOBAL TEMPERATURES

Error Code	Description	Alarm
E18	Global Flow Temperature > 95ºC	No
E19	Global Return Temperature > 95ºC	No
E92	All modules in error	Yes
Possible Causes and Solutions *The NTC and/or wiring of the global temperature involved is defective.* *Insufficient or even no circulation of water due to the obstruction of the sections or pump failure.*		

Note. *In the case that one of the connectors "X 11" to "X17" on the MBD, controlling the fans is not connected, the fan runs at max speed and the module will not switch on.*

SHORT LIST OF PARTS

The following are parts commonly required as replacements, due to damage or expendability.

A full list of spares is held by **Caradon Ideal Limited** distributors and merchants.

Their failure or absence will affect the safety and/or performance of this appliance.

When ordering spare parts please quote:

1. Boiler model
2. Boiler serial no. (refer to the data plate on boiler)
3. Boiler P.I. No. (refer to the data plate on boiler)
4. Description
5. Quantity
6. Part no.

When replacing any part on this appliance use only spare parts that you can be assured conform to the safety and performance specification that we require. Do not use reconditioned or copy parts that have not been clearly authorised by Ideal boilers.

Key No.	Description	Total Qty. Per Boiler	Part No.
23	Air Pressure Switch (1 per Burner) 605 38-53	4 to 7	173 039
24	Fan (1 per Burner) 55667.00291	4 to 7	173 030
25	Gas Valve (1 per Burner) VK 4115 10552	4 to 7	173 031
17	Ignition Electrode (1 per Burner) 08210716	4 to 7	173 023
18	Detection Electrode (1 per Burner) 08210711	4 to 7	173 024
23	Auto Air Vent	1	173 029
32	Global Flow/Return Sensor T7335D1040 12K	2	173 038
32	Module Temperature Sensor (1 per Section) T7335D1040 12K	5 to 8	173 038
1	Module Temperature O/H Sensor (1 per Section) T7335D1040 12K	5 to 8	172 994
29	MBD Control Board 1401 912116.3	1	173 035
31	AM4 Control Board	1	173 037
30	AM5 Control Board	0 to 3	173 036
34	Gas Pressure Switch	1	173 040
37	Pressure Gauge 964	1	173 043
2	Display Screen	1	172 995
3	Push Button Panel	1	172 996
26	CVI Board (1 per Burner) S4865 D10041	4 to 7	173 032
	Control Module Fuses (MBD)	2	173 640
27	Burners (1 per Burner)	4 to 7	173 033
28	Burner Gasket (1 per Burner)	4 to 7	173 034
6	Sight glass kit	4 to 7	172 999
5	Gas Valve Gasket Set	4 to 7	172 998
14	Fan Gasket	4 to 7	173 015
35	Reset Button	4 to 7	173 041
4	ON/OFF Switch	1	172 997

Technical Training

The Ideal Boilers Technical Training Centre offers a series of first class training courses for domestic, commercial and industrial heating installers, engineers and system specifiers. For details of courses please ring: 01482 498 432

Ideal Boilers, P.O. Box 103, National Ave, Kingston upon Hull, HU5 4JN. Telephone: 01482 492 251 Fax: 01482 448 858. Registration No. London 322 137.

Caradon Ideal Limited pursues a policy of continuing improvement in the design and performance of its products. The right is therefore reserved to vary specification without notice.

BOILERS Ideal

ENGINEERED FOR PEACE OF MIND

Caradon

Ideal Limited

Ideal Installer/Technical Helpline: 01482 498 376

www.idealboilers.com